RBC Roller®, HexLube®, CamCentric®

Cam Followers

A wide array of products including patented RBC Roller® cylindrical roller and needle roller cam followers - both stud and yoke styles.

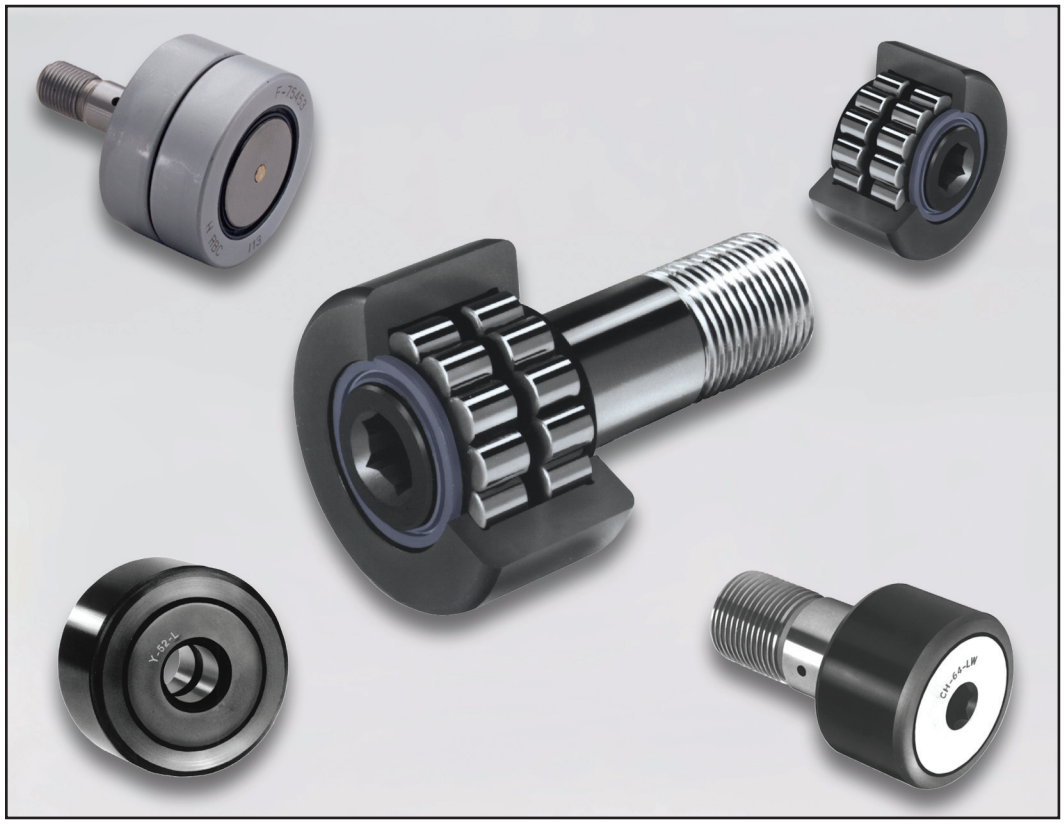

RBC BEARINGS®

RBC Division

www.rbcbearings.com
800.390.3300

RBC Bearings Incorporated (RBC Bearings, RBC) has had a long tradition of innovation, commitment, and quality since the company was founded in 1919. Today, RBC Bearings has grown into a world-class manufacturer of standard and custom-engineered bearings and related products, with a product focus on research, testing, and development of the best product for specific applications.

What We Manufacture

RBC Bearings, with facilities throughout North America and Europe, provides bearings and precision products for applications in the construction, mining, material handling, transportation and off-highway equipment, robotics and automation, farming, machine tool, and semiconductor equipment industries. Through RBC Aerospace Bearings, the company is a major manufacturer of highly-engineered bearings and precision products for military, defense, and commercial aerospace applications.

RBC's high-quality bearings include:

• Heavy Duty Needle Roller Bearings - Pitchlign® caged heavy duty needle roller bearings, inner rings, type TJ TandemRoller® bearings for long life.

• Spherical Plain Bearings - Radial, angular, contact, high misalignment, extended inner ring, DuraLube™ maintenance-free spherical plain bearings, QuadLube® long life bearings, ImpactTuff® case carburized bearings, ShimPack® double-acting angular contact bearings, CrossLube® lubrication groove systems, and SpreadLock® Seal.

• Cam Followers and Yoke Rollers - Standard stud, heavy stud, yoke type, caged roller followers, RBC Roller® long life cam followers, HexLube® universal cam followers, airframe track rollers. Mastguide rollers and carriage rollers, chain sheaves (for leaf chain), toothless sprockets (for roller chain), and heavy-duty roller bearing construction.

• Rod Ends - Commercial and aerospace, precision, Mil-Spec series, self-lubricating, inch and metric. Heim®, Unibal®, and Spherco™ brands.

• Self-Lubricating Bearings - Radial, thrust, rod ends, spherical plain bearings, high temperature, high loads, inch and metric. Fiberglide® brand.

• Thin Section Ball Bearings - Standard cross sections to one inch. Sizes to 40 inches. Stainless steel and other materials available. Seals available on all sizes and standard cross sections.

• Airframe Control Bearings - Ball bearing types, self-lubricating types, needle rollers, track rollers.

• Ground, Semiground, and Unground Ball Bearings - Full complement, utilizes design and burnished races for higher loads, long life, and smooth operation.

• Dowel Pins, Loose Needle Rollers, Shafts

• Tapered Roller and Tapered Thrust Bearings - Case-hardened and through-hardened in a variety of sizes, used in Class 8 heavy truck and trailer wheel bearings, final drive transmissions and gear boxes.

• Custom Designed Bearings - RBC produces a wide range of custom bearings in various materials for specific applications.

RBC Cam Followers

RBC produces an extensive cam follower product line from 1/2 inch roller O.D. to 10 inch roller O.D. Standard stud, heavy stud, and yoke types are made in sealed and unsealed configurations. The caged SRF roller is popular in applications requiring oil bath lubrication, high speed, or in applications greased for life.

RBC heavy duty roller type mast guide and chain sheaves are used in a variety of lifting mechanisms - lift trucks, auto lift and specialty lift.

RBC produces metric cam followers where volume permits. Contact RBC for availability.

Type NBC, NBF, and NBL aircraft track rollers are also listed in this catalog. These bearings are used in aircraft wing flaps and slats, as door latches, landing gear door hinges, and in a variety of industrial applications requiring plated bearings.

Unique cam follower products offered include:

- **RBC Roller®** - A long life cam follower, the RBC Roller (Patent No. 5531137) has been developed for use in applications that cannot be compromised. The RBC Roller offers an average 400% life improvement over needle bearing cam follower designs and can substantially reduce operating costs.
- **HexLube®** - RBC stud type cam followers have a new HexLube feature and come equipped with a grease fitting installed in the roller end, thus permitting relubrication. HexLube can reduce inventory by 50% by consolidating other varieties of cam followers and interchanging them with HexLube.
- **CamCentric®** - The RBC CamCentric cam follower allows the user to adjust the height at which the cam follower rides along the track.

How We Can Serve You

RBC has implemented a total quality control system that uses statistical quality control at all facilities, and manufactures in high volume to a just-in-time program.

To serve the ongoing needs of customers, RBC has a network of over 1,600 distributors and sales engineers throughout the US, Europe, and South America, with authorized agents worldwide. For assistance with your bearing application, contact:

Customer Service - 800.390.3300

Warranty

RBC products are warranted for material and workmanship for a period not to exceed 90 days from shipment and for a value not to exceed purchase price. No other warranty is in effect.

Disclaimer and Intellectual Property Statement

The materials comprising this Catalog are provided by RBC Bearings Incorporated ("RBC Bearings, RBC") as a service to its customers on an "as-is" basis for informational purposes only. RBC assumes no responsibility for any errors or omissions in these materials. RBC makes no commitment to update the information contained herein.

RBC makes no, and expressly disclaims any, representations or warranties, express or implied, regarding the Catalog, including, without limitation, any implied warranties of merchantability or fitness for a particular purpose. RBC makes no, and expressly disclaims any, warranties, express or implied, regarding the correctness, accuracy, completeness, timeliness, and reliability of the text, graphics and any other items in the Catalog. Under no circumstances shall RBC, its affiliates, or any of their respective partners, officers, directors, employees, agents or representatives be liable for any damages, whether direct, indirect, special or consequential damages for lost revenues, lost profits, or otherwise, arising from or in connection with this Catalog and the materials contained herein.

All materials contained in the Catalog are protected by copyright laws, and may not be reproduced, republished, distributed, transmitted, displayed, broadcast or otherwise exploited in any manner without the express prior written permission of RBC.

RBC's names and logos and all related trademarks (including RBC Part Numbers, Series Number, and Cone and Cup Numbers), tradenames, and other intellectual property are the property of RBC Bearings and cannot be used without its express prior written permission.

© 2006, 2007, 2008 RBC Bearings Incorporated

TABLE OF CONTENTS

Cam Follower Selection Guide 4-5

RBC Roller® 6-11

Patented Cam Follower Design for Extended Life
Series RBC, RBY

Stud Type Cam Followers 12-23
HexLube®Series Universal Cam Followers S--LW, CS--LW, S--LWX, CS--LWX, H--LW, CH--LW
Additional Series S, S--L, CS--L, H, H--L, CH--L

Yoke Type Cam Followers 24-25

Series Y, Y--L, CY--L

Caged Roller Followers and Inner Rings 26-29

Series SRF, SRF--S, SRF--SS, SRF--R, SRF--RR, IR

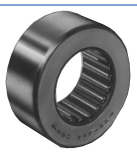

Mast Guides and Carriage Rollers 30-31

Chain Sheaves and Toothless Sprockets 32-33

Airframe Track Rollers and Needle Bearings 34-39

Series NBC, NBE, NBK, NBF, NBL

Technical Section 40-45

$$L_{10\ rev} = \left(\frac{C}{P_e}\right)^{\frac{10}{3}}$$

Typical Applications 46-48

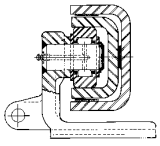

RBC Cam Follower Interchange Tables 49-54

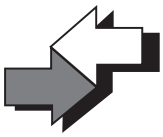

Custom Designed Cam Followers 55

CAM FOLLOWER SELECTION

RBC Cam Followers are presented in five groups: Needle Roller Cam Followers; Caged Roller Followers; RBC Roller® Long Life Cam Followers; Material Handling Rollers and Sheaves; and Airframe Track Rollers and Needle Bearings. RBC also produces a wide range of custom designed cam followers and track rollers. Designers and users with unusual application requirements should contact RBC to discuss custom designed cam followers.

Savings at Every Turn!

RBC Bearings produces the most innovative line of cam followers in the industry. The entire line is made from bearing quality steel for optimum performance. From the patented, long-life, RBC Roller® Cam Follower to the inventory reducing HexLube® line, RBC achieves cost savings and provides features that are unmatched by competitors. If you have a special application that is not served by the exhaustive list of products shown in this catalog, RBC has the engineering resources to create custom designed cam followers that will meet your needs.

RBC Roller®

The patented RBC Roller® is the leading cost-saver in the industry. This long-life cam follower lasts up to 400% longer than standard cam followers, with no maintenance! You can calculate your savings at our interactive website **www.rbcbearings.com.**

The RBC Roller® is dimensionally interchangeable with needle roller cam followers. The RBC Roller® is a good selection for production machinery applications where down time is critical and must be avoided, or where cam followers are not readily accessible for relubrication or replacement. They are available in stud type (page 8) and yoke type (page 10) configurations.

Two paths of end-guided, cylindrical rollers provide substantial increases in fatigue life and limiting speed. They can tolerate higher thrust loads than needle roller cam followers. Standard contacting lip seals offer enhanced protection against contaminants and positive grease retention. A large internal grease cavity assures maintenance-free service. Hex sockets are a standard feature. Crowned outer rings are available as an option.

HexLube®

RBC's new Universal HexLube® line of cam followers can reduce your inventory by about 50%! This innovative line can eliminate the need for you to stock screwdriver slot or unsealed cam followers. Find out how much your inventory can be reduced at **www.rbcbearings.com.**

The new HexLube® feature allows hex head cam followers to be relubricated through the hex head – a great convenience in tight spaces or when stud access is impossible. This feature is now available in sizes from 3/4" to 7" with either a standard stud or heavy stud. Eccentric and crowned versions are also available. Standard hex head cam followers are available in smaller sizes starting at 1/2".

Needle Roller Cam Followers

Needle Roller Cam Followers have a heavy outer ring cross section and a full complement of needle rollers. They offer high dynamic and static load carrying capability, and anti-friction performance, in a compact design. They are used as track rollers, cam followers, and in a wide range of linear motion systems.

Standard Stud cam followers (page 14) offer the mounting convenience of a threaded stud and are designed to accommodate moderate loads. They are available with and without seals. Standard stud cam followers are also available with crowned outer rings (page 16) for applications where misalignment is a problem.

Heavy Stud cam followers (page 20) are designed to provide additional stud strength for applications with high loading or shock loads. Heavy stud cam followers are available with and without seals, and with crowned outer rings (page 22).

Yoke Type cam followers (page 24) are intended primarily for applications where loading conditions exceed the capabilities of stud type cam followers, or where clevis mounting is desired. Clevis mounting provides support on both sides of the cam follower and permits use of a high strength pin. Yoke type cam followers are available with and without seals, and with crowned outer rings.

CamCentric® adjustable cam followers (page 18) are used where accurate positioning is required. They are particularly useful for reducing clearance or backlash in opposed arrangements, and for assuring load sharing in multiple cam follower installations. Seals and hex socket are standard features of CamCentric® adjustable cam followers. Crowned outer rings are also available.

Crowned Outer Rings are used to minimize outer ring thrusting in applications where the axis of the cam follower is not parallel to the surface of the track or is skewed relative to the direction of travel. Crowned outer rings are a good selection for use with curved or circular tracks. In well aligned applications, crowned outer rings can cause accelerated track wear.

Caged Roller Followers

Caged roller followers (page 26) provide large internal grease storage capacity for applications where relubrication is infrequent. Cage guided rollers and a very heavy outer ring cross section permit operation at high loads and high speeds. Caged roller followers are available with and without seals. The unsealed design provides the additional advantages of very low friction to prevent skidding in lightly loaded

Cam Follower Selection Guide

Application Requirements		Needle Roller Cam Followers					Caged Roller Follower	RBC® Roller
		Standard stud	Heavy stud	Yoke type	Cam-Centric™	Crowned Outer Ring		
Dynamic loading	MODERATE	✔			✔			✔
	HEAVY		✔				✔	
	VERY HEAVY			✔				
Shock loading			✔	✔				
High static loads			✔	✔				
Contamination								✔
Maintenance free								✔
Long life							✔	✔
Misalignment						✔		✔
Load sharing					✔			
Adjustability					✔			
High speed							✔	✔
Low friction							✔	
Circular track						✔		
See pages ➤		14 - 15	20 - 21	24 - 25	18 - 19	*	26 - 29	6 - 11

*** Standard stud - page 16 Heavy stud - page 22 Yoke type - page 24**

applications and provides for flow-through lubrication.

Caged roller followers normally mount directly on a hardened and ground pin. RBC offers a line of Precision Ground Inner Rings (page 28) to simplify application of caged roller followers. More information on shaft and mounting considerations is provided in part 5.4 of the technical section (page 45).

Material Handling Rollers and Sheaves

RBC offers a wide range of rollers and sheaves specifically designed for material handling applications—lifting, conveying, and power transmission. All RBC rollers and sheaves use heavy duty roller bearing construction which provides maximum dynamic and shock capacity for longer service life than ball bearing designs.

Lift Truck, Crane and Conveyor Rollers (page 30, 31) commonly referred to as mast guide rollers or carriage rollers, are used in lift truck masts and carriages, travelling cranes, and conveyor lines, where maximum capacity in an anti-friction roller is required. Sealed, lubricated-for-life versions are available.

Chain Sheave and Sprocket Idlers (page 32, 33) for BL-leaf and ANSI "rollerless" roller hoisting chain are essential components of hoisting systems such as lift trucks and car lifts. They are also used as track rollers and as tensioners in power transmission chain drives.

Airframe Track Rollers and Needle Bearings

Airframe track rollers and needle bearings are designed for high load carrying capability, light weight, and slow rotation or oscillatory motion. The exposed surfaces are plated to provide corrosion resistance. They are used in aircraft flap, slat and control applications, and in numerous non-aircraft applications.

Series NBC needle bearings (page 34) offer high capacity, thin cross section and unitized construction. They are commonly used in pivots and linkages.

Series NBE and NBK needle bearings (page 36, 37) provide a spherical aligning outer ring to allow for misalignment. Applications and performance characteristics are otherwise similar to series NBC.

Series NBF and NBL track rollers (page 38, 39) are designed with heavy outer ring cross section for track roller applications. They offer a corrosion resistant alternative to conventional yoke type cam followers.

RBC ROLLER®

Stud and Yoke Type

The RBC Roller® was developed for customers needing a high degree of assurance of long cam follower life. It can be used to great advantage in conveyors, automotive transfer lines or process industries—food, beverage, plastics, glass and others. The RBC Roller® is also attractive for defense applications, where system reliability and maintainability are primary design goals. The internal design and construction differ from typical needle bearing, ball bearing, and tapered roller bearing cam followers. The RBC Roller® design is unique and is covered by Patent 5531137.

Two paths of cylindrical rollers create stable outer ring support. The comparatively large diameter of the rollers provides substantially increased dynamic capacity and fatigue life. On a size by size basis, the RBC Roller® offers at least twice, and up to nine times the fatigue life of conventional needle roller bearing cam followers.

A center thrust ring in the RBC Roller® imparts end guidance to the two paths of rollers. Conventional needle roller bearing cam followers rely on outer ring curvature and controlled circumferential clearance for roller guidance. The needle rollers often skew during normal operation, generating unnecessary heat which can lead to premature failure. When compared to needle roller bearing cam followers, end-guided cylindrical rollers allow the RBC Roller® to run at lower operating temperatures and higher speeds.

Thrust loading in the RBC Roller® is accommodated through contact between outer ring flanges and roller ends, and contact between roller ends and the center thrust ring. This provides the RBC Roller® with superior thrust capability. As a result, the RBC Roller® is tolerant of tracking misalignment and axial loads that would overwhelm other designs.

Contacting lip seals are a standard feature of the RBC Roller®. These seals ride on smooth ground surfaces on the inner ring or stud. This sealing system provides positive exclusion of solid and liquid contaminants, and excellent lubricant retention. When compared to clearance seals typical of most cam follower designs, the RBC Roller® contacting lip seals ensure superior protection in demanding environments.

The RBC Roller® is pre-lubricated at the factory with a high quality mineral oil, NLGI grade 2 grease. The space between the two paths of rollers which is created by the center thrust ring provides a large grease storage cavity. This larger than normal ability to store lubricant, in combination with excellent grease retention of the contacting lip seals, makes the RBC Roller® virtually maintenance-free. Under most operating conditions relubrication is not necessary.

The design of the RBC Roller® provides the additional benefit of positive, unitized construction. Conventional cam followers rely on swaging or staking, particularly in yoke type configurations, to maintain integrity of the assembly. If adequate axial clamping is not provided, these designs can drift apart and cause catastrophic failure. During assembly of the RBC Roller®, the center thrust ring permanently engages a circumferential groove in the stud or inner ring. This design feature ensures integrity of the assembly during handling and operation, and simplifies mounting design.

The RBC Roller® is available in stud and yoke type configurations. Standard sizes range from 1 1/4 inches outside diameter to 10 inches outside diameter. The RBC Roller® is dimensionally interchangeable with standard needle roller bearing cam follower designs.

FEATURED PRODUCT

The RBC ROLLER® Cam Follower

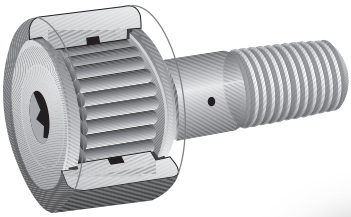

STANDARD CAM FOLLOWER CONFIGURATION

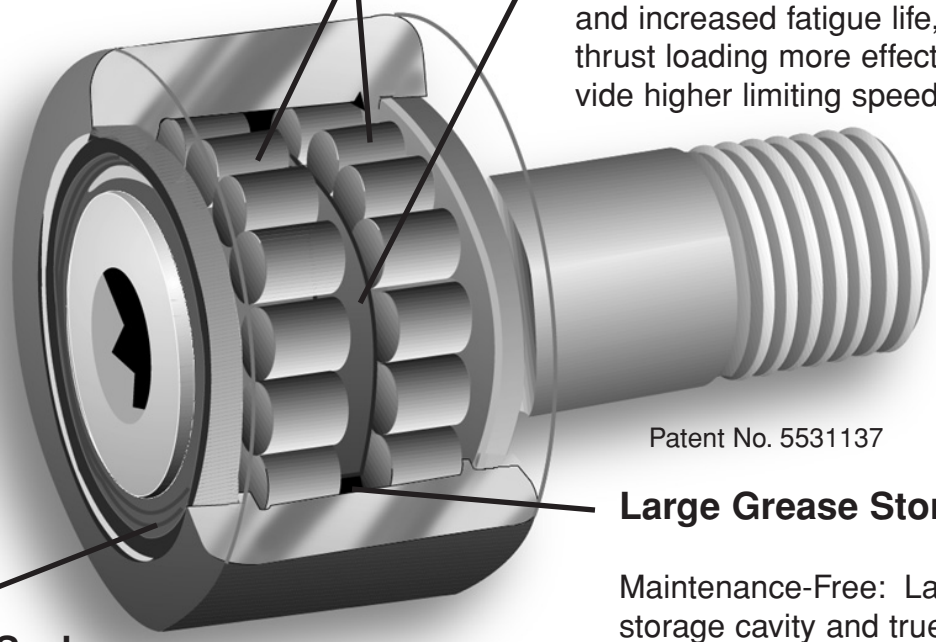

Center Thrust Ring

Increased Life: large diameter, end-guided rollers yield maximum capacity and increased fatigue life, accommodate thrust loading more effectively, and provide higher limiting speeds.

Patent No. 5531137

Large Grease Storage Cavity

Maintenance-Free: Large grease storage cavity and true contacting lip seals provide superior contaminant exclusion and lubricant retention for maintenance-free operation.

THE RBC ROLLER® — A PROVEN COST-SAVER!

- ✔ Lasts up to 4 times longer than standard cam followers
  - —Saves replacement costs
  - —Saves downtime costs
- ✔ Maintenance-Free
  - —Saves maintenance costs
  - —Saves lubrication costs
  - —Saves time
- ✔ Increased speeds
  - —Boosts productivity
- ✔ Lower running temperature—approximately 50°F cooler.
- ✔ Interchangeable with Needle Bearing Cam Followers

RBC Roller®

Long Life Cam Followers

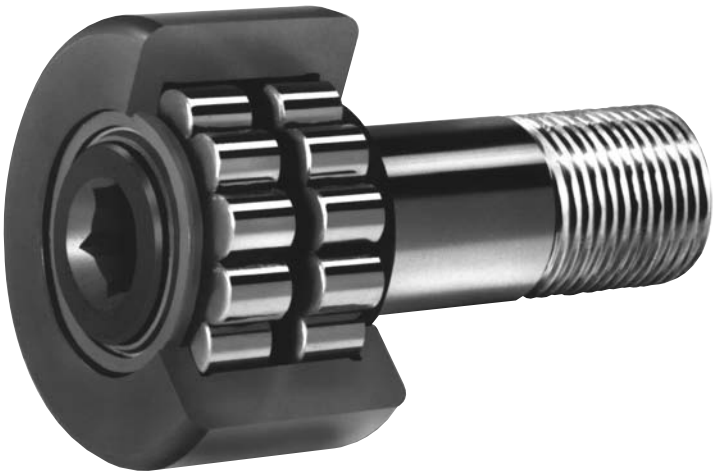

Series RBC

PART NUMBER	ROLLER		STUD					Approx. Weight [lbs]	
	D +.000 - .001	B +.000 - .005	SD +.001 - .000	SL Shank Length	K Shoulder Diameter	TL Eff. Thread Length	Thread Class 2A		
RBC 1	1.000	.625	.4375	1.000	.500	.500	7/16-20	.16	
RBC 1 1/8	1.125	.625	.4375	1.000	.500	.500	7/16-20	.19	
RBC 1 1/4	1.250	.750	.5000	1.250	.625	.625	1/2-20	.29	
RBC 1 3/8	1.375	.750	.5000	1.250	.625	.625	1/2-20	.34	
RBC 1 1/2	1.500	.875	.6250	1.500	.750	.750	5/8-18	.51	
RBC 1 5/8	1.625	.875	.6250	1.500	.750	.750	5/8-18	.61	
RBC 1 3/4	1.750	1.000	.7500	1.750	1.000	.875	3/4-16	.83	
RBC 1 7/8	1.875	1.000	.7500	1.750	1.000	.875	3/4-16	.92	
RBC 2	2.000	1.250	.8750	2.000	1.125	1.000	7/8-14	1.32	
RBC 2 1/4	2.250	1.250	.8750	2.000	1.125	1.000	7/8-14	1.61	
RBC 2 1/2	2.500	1.500	1.0000	2.250	1.250	1.125	1-14	2.48	
RBC 2 3/4	2.750	1.500	1.0000	2.250	1.250	1.125	1-14	2.83	
RBC 3	3.000	1.750	1.2500	2.500	1.500	1.250	1 1/4-12	4.04	
RBC 3 1/4	3.250	1.750	1.2500	2.500	1.500	1.250	1 1/4-12	4.75	
RBC 3 1/2	3.500	2.000	1.3750	2.750	1.625	1.375	1 3/8-12	6.22	
RBC 4	4.000	2.250	1.5000	3.500	1.750	1.500	1 1/2-12	7.44	
RBC 5	5.000	2.750	2.0000	5.062	2.250	2.562	2-12	18.70	
RBC 6	6.000	3.250	2.5000	6.000	3.000	3.000	2 1/2-12	32.90	
RBC 7	7.000	3.750	3.0000	7.688	3.750	4.125	3-12	53.50	
RBC 8	8.000	4.250	3.2500	8.500	4.000	4.250	3 1/4-4	73.60	
RBC 9	9.000	4.750	3.7500	9.500	4.500	4.750	3 1/2-4	102.70	
RBC 10	10.000	5.250	4.2500	10.000	5.000	4.750	3 1/2-4	137.00	

All dimensions are in inches.

To specify RBC Roller® with lubrication holes, add OH suffix (example: RBC 1 1/2 OH).

Seals can be removed for flow-through lubrication.

To specify RBC Roller® without seals, add NS suffix (example: RBC 4 NS).

To specify RBC Roller® with crowned outer ring, add C prefix (example: CRBC 2 1/2).
Refer to page 16 for crown radius.

RBC Roller®

Long Life Cam Followers

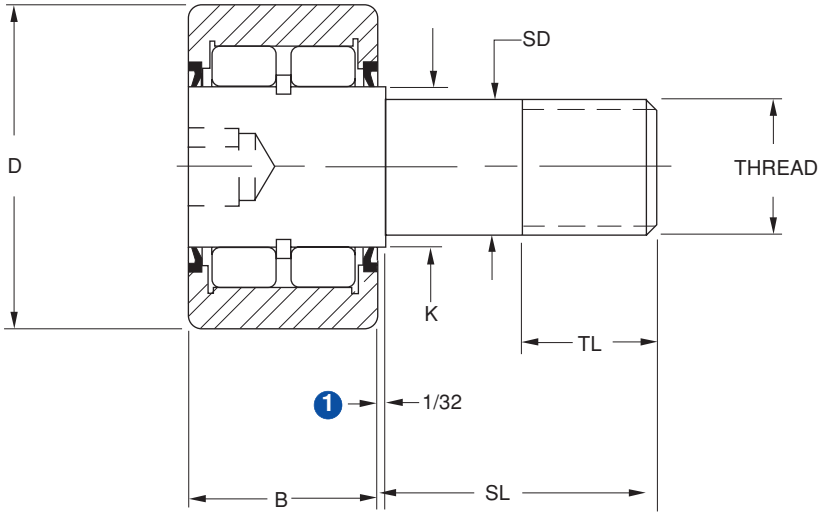

Socket Head Wrench Size	Speed Limit [rpm]	CAPACITIES				MOUNTING DATA		PART NUMBER
		Dynamic Capacity C [lbf]	Static Capacity C_O [lbf] 3	Maximum Allow. Load [lbf]	Track Capacity @ 40 Rc [lbf]	Max. Clamping Torque [in∗lbf] 2	Hsg Bore +.0005 - .0002	
1/4	9,400	3,000	3,200	1,400	1,660	100	.4375	**RBC 1**
1/4	9,400	3,000	3,200	1,700	1,870	100	.4375	**RBC 1 1/8**
1/4	7,500	4,100	4,300	1,500	2,440	180	.5000	**RBC 1 1/4**
1/4	7,500	4,100	4,300	1,850	2,680	180	.5000	**RBC 1 3/8**
5/16	6,200	6,200	7,000	2,400	3,320	390	.6250	**RBC 1 1/2**
5/16	6,200	6,200	7,000	2,800	3,600	390	.6250	**RBC 1 5/8**
5/16	4,700	8,200	10,500	3,150	4,550	750	.7500	**RBC 1 3/4**
5/16	4,700	8,200	10,500	3,800	4,900	750	.7500	**RBC 1 7/8**
7/16	4,100	12,400	17,200	5,500	6,500	900	.8750	**RBC 2**
7/16	4,100	12,400	17,200	7,000	7,300	900	.8750	**RBC 2 1/4**
1/2	3,700	16,800	22,800	9,100	9,400	1,300	1.0000	**RBC 2 1/2**
1/2	3,700	16,800	22,800	10,900	10,400	1,300	1.0000	**RBC 2 3/4**
5/8	3,100	28,900	39,100	15,000	13,300	2,000	1.2500	**RBC 3**
5/8	3,100	28,900	39,100	17,800	14,400	2,000	1.2500	**RBC 3 1/4**
5/8	2,900	36,100	53,000	21,200	17,300	2,500	1.3750	**RBC 3 1/2**
3/4	2,600	45,600	68,000	23,700	22,000	3,000	1.5000	**RBC 4**
7/8	2,000	71,000	110,000	43,700	35,000	3,000	2.0000	**RBC 5**
1	1,500	102,000	170,000	60,000	51,000	3,000	2.5000	**RBC 6**
1 1/4	1,200	135,000	218,000	70,000	61,000	3,000	3.0000	**RBC 7**
1 1/4	1,100	175,000	272,000	98,000	70,000	3,000	3.2500	**RBC 8**
1 1/4	1,000	221,000	352,000	127,000	79,000	3,000	3.7500	**RBC 9**
1 1/4	900	272,000	441,000	159,000	88,000	3,000	4.2500	**RBC 10**

Excessive clamping torque may cause shoulder K to dig into housing.

1 1/16 inch for sizes RBC 5 and larger.
2 Torque may be doubled for completely dry threads.
3 Bearing Static Capacity provided for comparison only.

RBC Roller®

Long Life Yoke Rollers

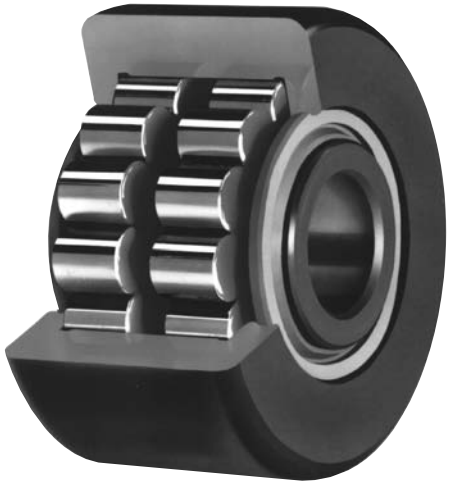

Series RBY

PART NUMBER	ROLLER D +.000 - .001	ROLLER B_1 +.000 - .005	d Inside Diameter Nom.	d Inside Diameter Min.	d Inside Diameter Max.	B Overall Width +.005 - .010	F Shaft Shoulder (Ref)	Approx. Weight [lbs]
RBY 1	1.000	.625	5/16	.3121	.3127	.6925	.500	.115
RBY 1 1/8	1.125	.625	5/16	.3121	.3127	.6925	.500	.150
RBY 1 1/4	1.250	.750	3/8	.3746	.3752	.8125	.625	.230
RBY 1 3/8	1.375	.750	3/8	.3746	.3752	.8125	.625	.280
RBY 1 1/2	1.500	.875	7/16	.4371	.4377	.9375	.750	.370
RBY 1 5/8	1.625	.875	7/16	.4371	.4377	.9375	.750	.440
RBY 1 3/4	1.750	1.000	1/2	.4996	.5002	1.0625	1.000	.580
RBY 1 7/8	1.875	1.000	1/2	.4996	.5002	1.0625	1.000	.670
RBY 2	2.000	1.250	5/8	.6246	.6252	1.3125	1.125	.920
RBY 2 1/4	2.250	1.250	5/8	.6246	.6252	1.3125	1.125	1.20
RBY 2 1/2	2.500	1.500	3/4	.7496	.7502	1.5625	1.250	1.75
RBY 2 3/4	2.750	1.500	3/4	.7496	.7502	1.5625	1.250	2.15
RBY 3	3.000	1.750	1	.9995	1.0001	1.8125	1.500	2.87
RBY 3 1/4	3.250	1.750	1	.9995	1.0001	1.8125	1.500	3.43
RBY 3 1/2	3.500	2.000	1 1/8	1.1245	1.1251	2.0625	1.625	4.50
RBY 4	4.000	2.250	1 1/4	1.2495	1.2501	2.3125	1.750	6.65
RBY 5	5.000	2.750	1 3/4	1.7495	1.7501	2.8750	2.250	12.30
RBY 6	6.000	3.250	2 1/4	2.2495	2.2501	3.3750	3.000	20.60
RBY 7	7.000	3.750	2 3/4	2.7495	2.7501	3.8750	3.750	31.80
RBY 8	8.000	4.250	3 1/4	3.2550	3.2560	4.5000	4.000	46.50
RBY 9	9.000	4.750	3 3/4	3.7550	3.7560	5.0000	4.500	65.00
RBY 10	10.000	5.250	4 1/4	4.2550	4.2560	5.5000	5.000	88.00

All dimensions are in inches.

To specify RBC Roller® with lubrication holes, add OH suffix (example: RBY 1 3/4 OH).

Seals can be removed for flow-through lubrication.

To specify RBC Roller® without seals, add NS suffix (example: RBY 3 1/2 NS).

To specify RBC Roller® with crowned outer ring, add C prefix (example: CRBY 1 7/8).
Refer to page 24 for crown radius.

RBC Roller®

Long Life Yoke Rollers

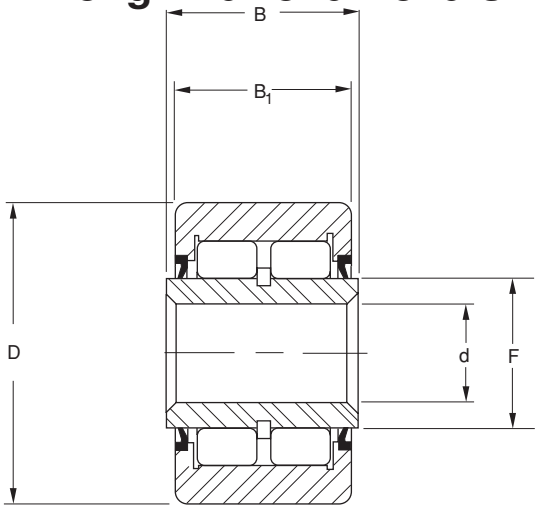

Speed Limit [rpm]	CAPACITIES				MOUNTING DATA				PART NUMBER
	Dynamic Capacity C [lbf]	Static Capacity C_O [lbf] (1)	Maximum Allow. Load [lbf]	Track Capacity @ 40 Rc [lbf]	Transition Fit		Press Fit		
					Max.	Min.	Max.	Min.	
9,400	3,000	3,200	1,400	1,660	.3122	.3118	.3130	.3126	**RBY 1**
9,400	3,000	3,200	1,700	1,870	.3122	.3118	.3130	.3126	**RBY 1 1/8**
7,500	4,100	4,300	1,500	2,440	.3747	.3743	.3755	.3751	**RBY 1 1/4**
7,500	4,100	4,300	1,850	2,680	.3747	.3743	.3755	.3751	**RBY 1 3/8**
6,200	6,200	7,000	2,400	3,320	.4372	.4368	.4380	.4376	**RBY 1 1/2**
6,200	6,200	7,000	2,800	3,600	.4372	.4368	.4380	.4376	**RBY 1 5/8**
4,700	8,200	10,500	3,150	4,550	.4997	.4993	.5007	.5003	**RBY 1 3/4**
4,700	8,200	10,500	3,800	4,900	.4997	.4993	.5007	.5003	**RBY 1 7/8**
4,100	12,400	17,200	5,500	6,500	.6247	.6243	.6257	.6253	**RBY 2**
4,100	12,400	17,200	7,000	7,300	.6247	.6243	.6257	.6253	**RBY 2 1/4**
3,700	16,800	22,800	9,100	9,400	.7497	.7493	.7507	.7503	**RBY 2 1/2**
3,700	16,800	22,800	10,900	10,400	.7497	.7493	.7507	.7503	**RBY 2 3/4**
3,100	28,900	39,100	15,000	13,300	.9996	.9991	1.0008	1.0003	**RBY 3**
3,100	28,900	39,100	17,800	14,400	.9996	.9991	1.0008	1.0003	**RBY 3 1/4**
2,900	36,100	53,000	21,200	17,300	1.1246	1.1241	1.1258	1.1253	**RBY 3 1/2**
2,600	45,600	68,000	23,700	22,000	1.2496	1.2491	1.2508	1.2503	**RBY 4**
2,000	71,000	110,000	43,700	35,000	1.7496	1.7491	1.7508	1.7503	**RBY 5**
1,500	102,000	170,000	60,000	52,000	2.2496	2.2491	2.2508	2.2503	**RBY 6**
1,200	135,600	218,000	70,000	61,000	2.7496	2.7491	2.7508	2.7503	**RBY 7**
1,100	175,400	272,000	98,000	70,000	3.2550	3.2540	3.2570	3.2560	**RBY 8**
1,000	221,000	352,000	127,000	79,000	3.7550	3.7540	3.7570	3.7560	**RBY 9**
900	272,000	441,000	159,000	88,000	4.2550	4.2540	4.2570	4.2560	**RBY 10**

(1) Bearing Static Capacity provided for comparison only.

HexLube® Universal Cam Follower

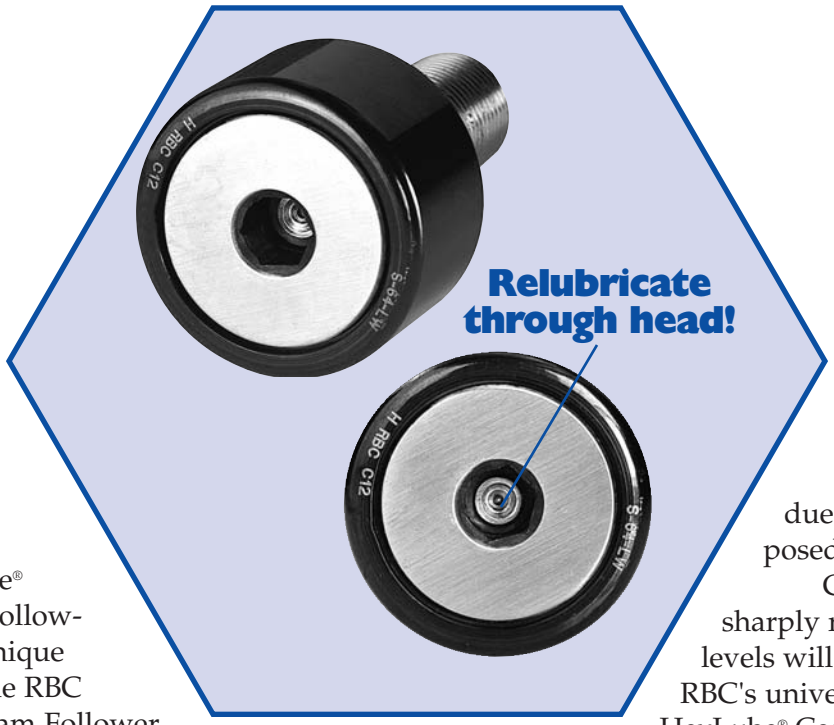

RBC Bearings offers the new HexLube® Universal line of cam followers, designed with a unique lubricating feature. The RBC HexLube® Universal Cam Follower allows for relubrication through the hexagonal head of the cam follower, making relubrication in tight spots possible. In addition, the universal design of the RBC HexLube® Cam Follower can eliminate the need to stock both screwdriver slot and unsealed cam followers. RBC expects that most customers can reduce their inventory on stud type cam followers by 50% using this new universal line. The complete line is available in sizes with an outside diameter from 3/4 inch to 7 inches.

The RBC HexLube® Universal Cam Follower design provides the easiest and fastest way to relubricate cam followers in hard to reach places or in applications where stud access is limited. A cam follower that is properly maintained and lubricated will last longer than a cam follower that is neglected due to the difficulties posed by relubrication.

Companies looking to sharply reduce their inventory levels will recognize the value of RBC's universal design of the new HexLube® Cam Follower. By stocking the RBC HexLube® line, companies will no longer need to carry inventories of either screwdriver slot or unsealed cam followers.

The entire line of RBC HexLube® Universal Cam Followers is dimensionally interchangeable with other needle bearing cam followers. The RBC HexLube® Universal Cam Follower is available in both eccentric and crowned versions. Both standard studs and heavy studs are available as well.

RBC HexLube® Universal Cam Followers are designed for applications such as automation and production equipment, bottling and canning, printing machinery, material handling, construction equipment, transfer lines, food processing, and packaging equipment.

HexLube®

HexLube®

The Universal Cam Follower Line by RBC

RBC developed the Universal Cam Follower product line to replace standard cam followers, and delivered two obvious benefits. First, it is possible to relubricate the hex head cam follower through the head. The hex head feature is the preferred mounting method for stud-type cam followers, and now it can be relubricated in tight spots or when stud access is restricted. Second, the HexLube® can eliminate the need to stock both screwdriver slot and unsealed cam followers. Your inventory can be reduced by about 50%!

RBC looked at the cam follower market and found 358 line items and five manufacturers (1790 line items!) The challenge was to reduce the number of part numbers needed to satisfy the market without sacrificing features and benefits. The answer was the "Universal Cam Follower Product Line." The HexLube® cam follower allows lubrication through the head of the cam follower, eliminating the need to stock the screwdriver slot series. Also eliminated from the line were all unsealed cam followers. Reducing your inventory by this large amount results in real savings. The end result is a product line with just 186 line items!

THE RBC HexLube®

SAVINGS AT EVERY TURN!

- ✔ Inventory Reduction of About 50%
- ✔ Allows Relubrication in tight spots or when stud access is limited
- ✔ HexLube® Universal Cam Follower can eliminate the need to stock screwdriver slots or unsealed cam followers
- ✔ Sizes from 3/4" to 7" O.D.
- ✔ Eccentric and Crowned versions
- ✔ Available in Standard Stud and Heavy Stud

Cam Followers

Standard Stud

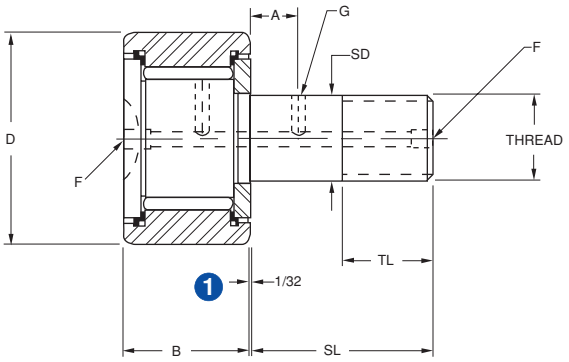

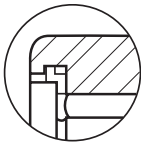

with Glide-A-Seal®

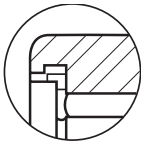

without seal

Series S, S--L

	PART NUMBER			ROLLER		STUD					
Nominal Size	Slotted Head	Slotted Head & Sealed	Hexlube™ Socket Head & Sealed	**D** +.000 - .001	**B** +.000 - .005	**SD** +.001 - .000	**SL** Shank Length	**TL** Eff. Thread Length	Thread Class 2A	Approx. Weight [lbs]	
1/2	**S 16**	**S 16 L**	**S 16 LW**	.5000	.375	.1900	.625	.250	10-32	.023	
9/16	**S 18**	**S 18 L**	**S 18 LW**	.5625	.375	.1900	.625	.250	10-32	.031	
5/8	**S 20**	**S 20 L**	**S 20 LW**	.6250	.438	.2500	.750	.313	1/4-28	.048	
11/16	**S 22**	**S 22 L**	**S 22 LW**	.6875	.438	.2500	.750	.313	1/4-28	.051	
3/4	**S 24**	**S 24 L**	**S 24 LW**	.7500	.500	.3750	.875	.375	3/8-24	.076	
7/8	**S 28**	**S 28 L**	**S 28 LW**	.8750	.500	.3750	.875	.375	3/8-24	.100	
1	**S 32**	**S 32 L**	**S 32 LW**	1.0000	.625	.4375	1.000	.500	7/16-20	.160	
1 1/8	**S 36**	**S 36 L**	**S 36 LW**	1.1250	.625	.4375	1.000	.500	7/16-20	.190	
1 1/4	**S 40**	**S 40 L**	**S 40 LW**	1.2500	.750	.5000	1.250	.625	1/2-20	.290	
1 3/8	**S 44**	**S 44 L**	**S 44 LW**	1.3750	.750	.5000	1.250	.625	1/2-20	.340	
1 1/2	**S 48**	**S 48 L**	**S 48 LW**	1.5000	.875	.6250	1.500	.750	5/8-18	.510	
1 5/8	**S 52**	**S 52 L**	**S 52 LW**	1.6250	.875	.6250	1.500	.750	5/8-18	.610	
1 3/4	**S 56**	**S 56 L**	**S 56 LW**	1.7500	1.000	.7500	1.750	.875	3/4-16	.830	
1 7/8	**S 60**	**S 60 L**	**S 60 LW**	1.8750	1.000	.7500	1.750	.875	3/4-16	.920	
2	**S 64**	**S 64 L**	**S 64 LW**	2.0000	1.250	.8750	2.000	1.000	7/8-14	1.320	
2 1/4	**S 72**	**S 72 L**	**S 72 LW**	2.2500	1.250	.8750	2.000	1.000	7/8-14	1.610	
2 1/2	**S 80**	**S 80 L**	**S 80 LW**	2.5000	1.500	1.0000	2.250	1.125	1-14	2.480	
2 3/4	**S 88**	**S 88 L**	**S 88 LW**	2.7500	1.500	1.0000	2.250	1.125	1-14	2.830	
3	**S 96**	**S 96 L**	**S 96 LW**	3.0000	1.750	1.2500	2.500	1.250	1 1/4-12	4.040	
3 1/4	**S 104**	**S 104 L**	**S 104 LW**	3.2500	1.750	1.2500	2.500	1.250	1 1/4-12	4.750	
3 1/2	**S 112**	**S 112 L**	**S 112 LW**	3.5000	2.000	1.3750	2.750	1.375	1 3/8-12	6.220	
4	**S 128**	**S 128 L**	**S 128 LW**	4.0000	2.250	1.5000	3.500	1.500	1 1/2-12	7.440	
5	-	-	**S 160 LW**	5.0000	2.750	2.0000	5.062	2.562	2-12	18.700	
6	-	-	**S 192 LW**	6.0000	3.250	2.5000	6.000	3.000	2 1/2-12	32.900	
7	-	-	**S 224 LW**	7.0000	3.750	3.0000	7.688	4.125	3-12	53.900	

All dimensions are in inches.

1 1/16" for sizes S 160 LW and larger.

HexLube® Universal Cam Followers

Standard Stud

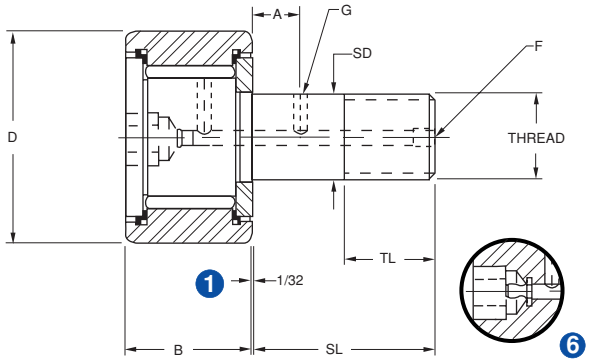

Series S--LW

F Lube Fitting [3]	A Loc.	G Dia.	Socket Head Wrench Size	Speed Limit [rpm]	CAPACITIES				MOUNTING DATA			Basic Number
					Dynamic Capacity C [lbf]	Static Capacity C_O [lbf] [5]	Max. Allow. Load [lbf]	Track Capacity at 40 Rc [lbf]	Max. [4] Clamping Torque [in∗lbf]	Housing Bore +.0005 - .0000	Min. Boss Dia.	
[2]	-	-	1/8	5,000	770	1,100	310	430	7.5	.1900	.29	**-16**
[2]	-	-	1/8	5,000	770	1,100	310	480	7.5	.1900	.29	**-18**
[2]	-	-	1/8	5,000	1,060	1,700	610	770	20	.2500	.36	**-20**
[2]	-	-	1/8	5,000	1,060	1,700	610	850	20	.2500	.36	**-22**
3/16	.250	.093	3/16	5,000	1,800	3,100	1,840	880	55	.3750	.50	**-24**
3/16	.250	.093	3/16	5,000	1,800	3,100	1,840	1,030	55	.3750	.50	**-28**
3/16	.250	.093	1/4	4,500	2,300	4,800	2,390	1,690	150	.4375	.64	**-32**
3/16	.250	.093	1/4	4,500	2,300	4,800	2,390	1,900	150	.4375	.64	**-36**
3/16	.312	.093	1/4	3,900	4,200	6,600	3,000	2,440	200	.5000	.76	**-40**
3/16	.312	.093	1/4	3,900	4,200	6,600	3,000	2,680	200	.5000	.76	**-44**
3/16	.375	.093	5/16	3,100	5,000	8,800	5,100	3,320	390	.6250	.89	**-48**
3/16	.375	.093	5/16	3,100	5,000	8,800	5,100	3,600	390	.6250	.89	**-52**
3/16	.437	.125	5/16	2,600	6,400	12,400	7,800	4,550	750	.7500	1.05	**-56**
3/16	.437	.125	5/16	2,600	6,400	12,400	7,800	4,900	750	.7500	1.05	**-60**
3/16	.500	.125	7/16	2,200	9,600	16,700	10,000	6,500	900	.8750	1.20	**-64**
3/16	.500	.125	7/16	2,200	9,600	16,700	10,000	7,300	900	.8750	1.20	**-72**
3/16	.562	.125	1/2	2,000	12,800	25,400	12,500	9,400	1,300	1.0000	1.31	**-80**
3/16	.562	.125	1/2	2,000	12,800	25,400	12,500	10,400	1,300	1.0000	1.31	**-88**
1/4	.625	.187	5/8	1,600	17,000	40,000	21,000	13,300	2,000	1.2500	2.00	**-96**
1/4	.625	.187	5/8	1,600	17,000	40,000	21,000	14,400	2,000	1.2500	2.00	**-104**
1/4	.687	.187	5/8	1,400	24,300	54,600	24,750	17,300	2,500	1.3750	2.39	**-112**
1/4	.750	.187	3/4	1,300	30,000	73,100	28,500	22,000	3,000	1.5000	2.62	**-128**
1/4 NPT	.875	.187	7/8	1,000	47,200	102,000	55,000	35,000	3,000	2.0000	3.50	**-160**
1/4 NPT	1.000	.187	1	800	62,900	165,500	90,000	52,000	3,000	2.5000	4.50	**-192**
1/4 NPT	1.250	.187	1 1/4	700	79,400	237,800	139,000	71,000	3,000	3.0000	5.25	**-224**

[2] Sizes S 16 through S 22 and S 16 L through S 22 L have a 1/8" hole at the flange end only.
[3] Sizes S 16 LW through S 22 LW cannot be relubricated.
[4] Torque may be doubled for completely dry threads.
[5] Bearing Static Capacity provided for comparison only.
[6] HexLube® Cam Followers can be regreased through the hex head using a Lincoln #5803 or Alemite #6785 needle nozzle adapter.

Crowned Cam Followers

Standard Stud

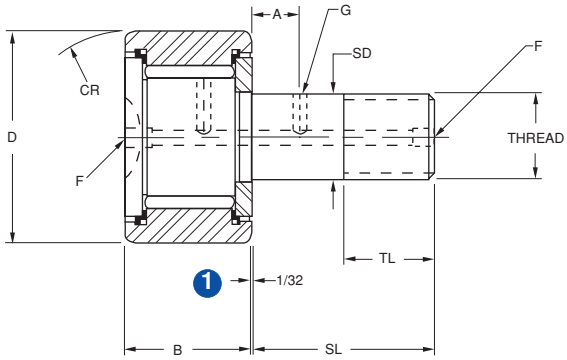

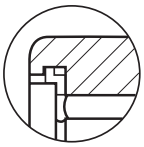

with Glide-A-Seal®

without seal

Series CS--L

Nominal Size	PART NUMBER		ROLLER			STUD				Approx. Weight [lbs]
	Slotted Head & Sealed	Hexlube® Socket Head & Sealed	**D** +.000 - .001	**B** +.000 - .005	**CR** Crown Radius	**SD** +.001 - .000	**SL** Shank Length	**TL** Eff. Thread Length	Thread Class 2A	
1/2	**CS 16 L**	**CS 16 LW**	.5000	.375	7	.1900	.625	.250	10-32	.023
9/16	**CS 18 L**	**CS 18 LW**	.5625	.375	7	.1900	.625	.250	10-32	.031
5/8	**CS 20 L**	**CS 20 LW**	.6250	.438	8	.2500	.750	.313	1/4-28	.048
11/16	**CS 22 L**	**CS 22 LW**	.6875	.438	8	.2500	.750	.313	1/4-28	.051
3/4	**CS 24 L**	**CS 24 LW**	.7500	.500	10	.3750	.875	.375	3/8-24	.076
7/8	**CS 28 L**	**CS 28 LW**	.8750	.500	10	.3750	.875	.375	3/8-24	.100
1	**CS 32 L**	**CS 32 LW**	1.0000	.625	12	.4375	1.000	.500	7/16-20	.160
1 1/8	**CS 36 L**	**CS 36 LW**	1.1250	.625	12	.4375	1.000	.500	7/16-20	.190
1 1/4	**CS 40 L**	**CS 40 LW**	1.2500	.750	14	.5000	1.250	.625	1/2-20	.290
1 3/8	**CS 44 L**	**CS 44 LW**	1.3750	.750	14	.5000	1.250	.625	1/2-20	.340
1 1/2	**CS 48 L**	**CS 48 LW**	1.5000	.875	20	.6250	1.500	.750	5/8-18	.510
1 5/8	**CS 52 L**	**CS 52 LW**	1.6250	.875	20	.6250	1.500	.750	5/8-18	.610
1 3/4	**CS 56 L**	**CS 56 LW**	1.7500	1.000	20	.7500	1.750	.875	3/4-16	.830
1 7/8	**CS 60 L**	**CS 60 LW**	1.8750	1.000	20	.7500	1.750	.875	3/4-16	.920
2	**CS 64 L**	**CS 64 LW**	2.0000	1.250	24	.8750	2.000	1.000	7/8-14	1.320
2 1/4	**CS 72 L**	**CS 72 LW**	2.2500	1.250	24	.8750	2.000	1.000	7/8-14	1.610
2 1/2	**CS 80 L**	**CS 80 LW**	2.5000	1.500	30	1.0000	2.250	1.125	1-14	2.480
2 3/4	**CS 88 L**	**CS 88 LW**	2.7500	1.500	30	1.0000	2.250	1.125	1-14	2.830
3	**CS 96 L**	**CS 96 LW**	3.0000	1.750	30	1.2500	2.500	1.250	1 1/4-12	4.040
3 1/4	**CS 104 L**	**CS 104 LW**	3.2500	1.750	30	1.2500	2.500	1.250	1 1/4-12	4.750
3 1/2	**CS 112 L**	**CS 112 LW**	3.5000	2.000	30	1.3750	2.750	1.375	1 3/8-12	6.220
4	**CS 128 L**	**CS 128 LW**	4.0000	2.250	30	1.5000	3.500	1.500	1 1/2-12	7.440
5	-	**CS 160 LW**	5.0000	2.750	48	2.0000	5.062	2.562	2-12	18.700
6	-	**CS 192 LW**	6.0000	3.250	56	2.5000	6.000	3.000	2 1/2-12	32.900
7	-	**CS 224 LW**	7.0000	3.750	60	3.0000	7.688	4.125	3-12	53.900

All dimensions are in inches.

1 1/16" for sizes CS 160 LW and larger.

HexLube® Universal Cam Followers

Standard Stud

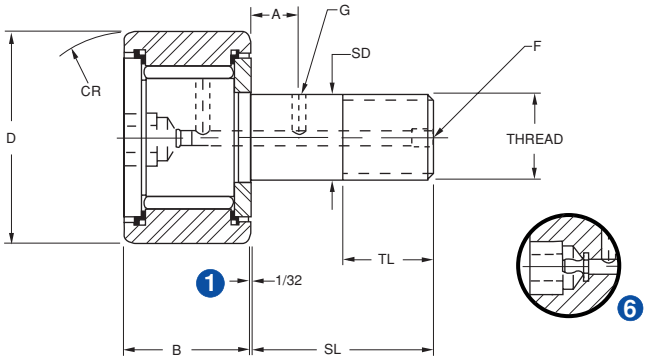

Series CS--LW

	F Lube Fitting ❸	A Loc.	G Dia.	Socket Head Wrench Size	Speed Limit [rpm]	CAPACITIES				MOUNTING DATA			Basic Number
						Dynamic Capacity C [lbf]	Static Capacity C_O [lbf] ❺	Max. Allow. Load [lbf]	Track Capacity at 40 Rc [lbf]	Max. ❹ Clamping Torque [in∗lbf]	Housing Bore +.0005 - .0000	Min. Boss Dia.	
	❷	-	-	1/8	5,000	770	1,100	310	430	7.5	.1900	.29	**-16**
	❷	-	-	1/8	5,000	770	1,100	310	480	7.5	.1900	.29	**-18**
	❷	-	-	1/8	5,000	1,060	1,700	610	770	20	.2500	.36	**-20**
	❷	-	-	1/8	5,000	1,060	1,700	610	850	20	.2500	.36	**-22**
	3/16	.250	.093	3/16	5,000	1,800	3,100	1,840	880	55	.3750	.50	**-24**
	3/16	.250	.093	3/16	5,000	1,800	3,100	1,840	1,030	55	.3750	.50	**-28**
	3/16	.250	.093	1/4	4,500	2,300	4,800	2,390	1,690	150	.4375	.64	**-32**
	3/16	.250	.093	1/4	4,500	2,300	4,800	2,390	1,900	150	.4375	.64	**-36**
	3/16	.312	.093	1/4	3,900	4,200	6,600	3,000	2,440	200	.5000	.76	**-40**
	3/16	.312	.093	1/4	3,900	4,200	6,600	3,000	2,680	200	.5000	.76	**-44**
	3/16	.375	.093	5/16	3,100	5,000	8,800	5,100	3,320	390	.6250	.89	**-48**
	3/16	.375	.093	5/16	3,100	5,000	8,800	5,100	3,600	390	.6250	.89	**-52**
	3/16	.437	.125	5/16	2,600	6,400	12,400	7,800	4,550	750	.7500	1.05	**-56**
	3/16	.437	.125	5/16	2,600	6,400	12,400	7,800	4,900	750	.7500	1.05	**-60**
	3/16	.500	.125	7/16	2,200	9,600	16,700	10,000	6,500	900	.8750	1.20	**-64**
	3/16	.500	.125	7/16	2,200	9,600	16,700	10,000	7,300	900	.8750	1.20	**-72**
	3/16	.562	.125	1/2	2,000	12,800	25,400	12,500	9,400	1,300	1.0000	1.31	**-80**
	3/16	.562	.125	1/2	2,000	12,800	25,400	12,500	10,400	1,300	1.0000	1.31	**-88**
	1/4	.625	.187	5/8	1,600	17,000	40,000	21,000	13,300	2,000	1.2500	2.00	**-96**
	1/4	.625	.187	5/8	1,600	17,000	40,000	21,000	14,400	2,000	1.2500	2.00	**-104**
	1/4	.687	.187	5/8	1,400	24,300	54,600	24,750	17,300	2,500	1.3750	2.39	**-112**
	1/4	.750	.187	3/4	1,300	30,000	73,100	28,500	22,000	3,000	1.5000	2.62	**-128**
	1/4 NPT	.875	.187	7/8	1,000	47,200	102,000	55,000	35,000	3,000	2.0000	3.50	**-160**
	1/4 NPT	1.000	.187	1	800	62,900	165,500	90,000	52,000	3,000	2.5000	4.50	**-192**
	1/4 NPT	1.250	.187	1 1/4	700	79,400	237,800	139,000	71,000	3,000	3.0000	5.25	**-224**

❷ Sizes CS 16 through CS 22 and CS 16 L through CS 22 L have a 1/8" hole at the flange end only.
❸ Sizes CS 16 LW through CS 22 LW cannot be relubricated.
❹ Torque may be doubled for completely dry threads.
❺ Bearing Static Capacity provided for comparison only.
❻ HexLube® Cam Followers can be regreased through the hex head using a Lincoln #5803 or Alemite #6785 needle nozzle adapter.

CamCentric® Adjustable Cam Followers

Cylindrical and Crowned O.D.

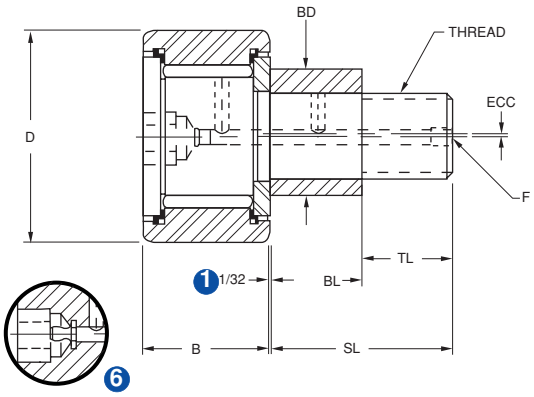

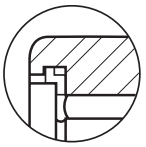

with Glide-A-Seal®

without seal

Series S--LWX

Nominal Size	PART NUMBER		ROLLER			STUD					
	Cylindrical O.D.	Crowned O.D.	D +.000 - .001	B +.000 - .005	CR Crown Radius	BD +.000 - .002	BL +.000 - .010 (1)	ECC Eccen-tricity	SL Shank Length	TL Eff. Thread Length	Thread Class 2A
1/2	**S 16 LWX**	**CS 16 LWX**	.5000	.375	7	.250	.375	.010	.625	.250	10-32
9/16	**S 18 LWX**	**CS 18 LWX**	.5625	.375	7	.250	.375	.010	.625	.250	10-32
5/8	**S 20 LWX**	**CS 20 LWX**	.6250	.438	8	.375	.437	.015	.750	.312	1/4-28
11/16	**S 22 LWX**	**CS 22 LWX**	.6875	.438	8	.375	.437	.015	.750	.312	1/4-28
3/4	**S 24 LWX**	**CS 24 LWX**	.7500	.500	10	.500	.500	.015	.875	.375	3/8-24
7/8	**S 28 LWX**	**CS 28 LWX**	.8750	.500	10	.500	.500	.015	.875	.375	3/8-24
1	**S 32 LWX**	**CS 32 LWX**	1.0000	.625	12	.625	.500	.030	1.000	.500	7/16-20
1 1/8	**S 36 LWX**	**CS 36 LWX**	1.1250	.625	12	.625	.500	.030	1.000	.500	7/16-20
1 1/4	**S 40 LWX**	**CS 40 LWX**	1.2500	.750	14	.687	.625	.030	1.250	.625	1/2-20
1 3/8	**S 44 LWX**	**CS 44 LWX**	1.3750	.750	14	.687	.625	.030	1.250	.625	1/2-20
1 1/2	**S 48 LWX**	**CS 48 LWX**	1.5000	.875	20	.875	.750	.030	1.500	.750	5/8-18
1 5/8	**S 52 LWX**	**CS 52 LWX**	1.6250	.875	20	.875	.750	.030	1.500	.750	5/8-18
1 3/4	**S 56 LWX**	**CS 56 LWX**	1.7500	1.000	20	1.000	.875	.030	1.750	.875	3/4-16
1 7/8	**S 60 LWX**	**CS 60 LWX**	1.8750	1.000	20	1.000	.875	.030	1.750	.875	3/4-16
2	**S 64 LWX**	**CS 64 LWX**	2.0000	1.250	24	1.187	1.000	.030	2.000	1.000	7/8-14
2 1/4	**S 72 LWX**	**CS 72 LWX**	2.2500	1.250	24	1.187	1.000	.030	2.000	1.000	7/8-14
2 1/2	**S 80 LWX**	**CS 80 LWX**	2.5000	1.500	30	1.375	1.125	.030	2.250	1.125	1-14
2 3/4	**S 88 LWX**	**CS 88 LWX**	2.7500	1.500	30	1.375	1.125	.030	2.250	1.125	1-14
3	**S 96 LWX**	**CS 96 LWX**	3.0000	1.750	30	1.750	1.250	.060	2.500	1.250	1 1/4-12
3 1/4	**S 104 LWX**	**CS 104 LWX**	3.2500	1.750	30	1.750	1.250	.060	2.500	1.250	1 1/4-12
3 1/2	**S 112 LWX**	**CS 112 LWX**	3.5000	2.000	30	1.812	1.375	.060	2.750	1.375	1 3/8-12
4	**S 128 LWX**	**CS 128 LWX**	4.0000	2.250	30	2.000	2.000	.060	3.500	1.500	1 1/2-12

All dimensions are in inches.

Do not clamp eccentric bushing.
Eccentric bushing press fitted and not heat treated to permit dowel or set screw engagement.

(1) For positive clamping action use a housing thickness tolerance of +0.010/-0.000 inches.

CamCentric® Adjustable Cam Followers

Cylindrical and Crowned O.D.

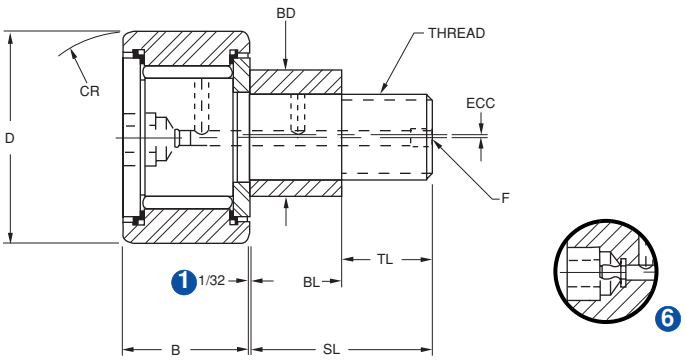

Series CS--LWX

Approx Weight [lbs]	F Lube Fitting	Socket Head Wrench Size	Speed Limit [rpm]	CAPACITIES: Dynamic Capacity C [lbf]	CAPACITIES: Static Capacity C_O [lbf] 4	CAPACITIES: Max. Allow. Load [lbf]	CAPACITIES: Track Capacity at 40 Rc [lbf]	MOUNTING DATA: Max. 3 Clamping Torque [in∗lbf]	MOUNTING DATA: Housing Bore +.002 +.001	Basic Number
.025	2	1/8	5,000	770	1,100	310	430	7.5	.250	**-16**
.033	2	1/8	5,000	770	1,100	310	480	7.5	.250	**-18**
.056	2	1/8	5,000	1,060	1,700	610	770	20	.375	**-20**
.059	2	1/8	5,000	1,060	1,700	610	850	20	.375	**-22**
.088	3/16	3/16	5,000	1,800	3,100	1,840	880	55	.500	**-24**
.11	3/16	3/16	5,000	1,800	3,100	1,840	1,030	55	.500	**-28**
.18	3/16	1/4	4,500	2,300	4,800	2,390	1,690	150	.625	**-32**
.21	3/16	1/4	4,500	2,300	4,800	2,390	1,900	150	.625	**-36**
.32	3/16	1/4	3,900	4,200	6,600	3,000	2,440	200	.687	**-40**
.37	3/16	1/4	3,900	4,200	6,600	3,000	2,680	200	.687	**-44**
.57	3/16	5/16	3,100	5,000	8,800	5,100	3,320	390	.875	**-48**
.67	3/16	5/16	3,100	5,000	8,800	5,100	3,600	390	.875	**-52**
.92	3/16	5/16	2,600	6,400	12,400	7,800	4,550	750	1.000	**-56**
1.01	3/16	5/16	2,600	6,400	12,400	7,800	4,900	750	1.000	**-60**
1.46	3/16	7/16	2,200	9,600	16,700	10,000	6,500	900	1.187	**-64**
1.75	3/16	7/16	2,200	9,600	16,700	10,000	7,300	900	1.187	**-72**
2.70	3/16	1/2	2,000	12,800	25,400	12,500	9,400	1,300	1.375	**-80**
3.05	3/16	1/2	2,000	12,800	25,400	12,500	10,400	1,300	1.375	**-88**
4.46	1/4	5/8	1,600	17,000	40,000	21,000	13,300	2,000	1.750	**-96**
5.17	1/4	5/8	1,600	17,000	40,000	21,000	14,400	2,000	1.750	**-104**
6.65	1/4	5/8	1,400	24,300	54,600	24,750	17,300	2,500	1.812	**-112**
8.22	1/4	3/4	1,300	30,000	73,100	28,500	22,000	3,000	2.000	**-128**

2 Sizes S 16 LWX through S 22 LWX and CS 16 LWX through CS 22 LWX cannot be relubricated.
3 Torque may be doubled for completely dry threads.
4 Bearing Static Capacity provided for comparison only.
6 HexLube® Cam Followers can be regreased through the hex head using a Lincoln #5803 or Alemite #6785 needle nozzle adapter.

Cam Followers

Heavy Stud

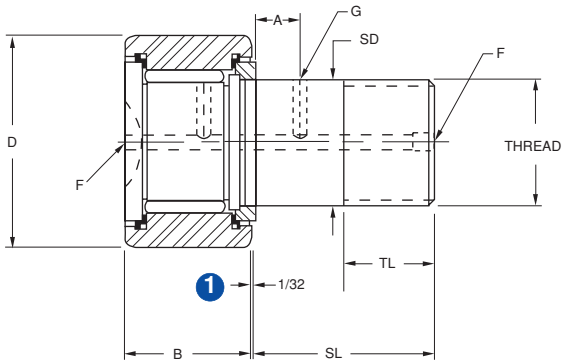

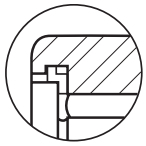

with Glide-A-Seal®

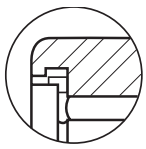

without seal

Series H, H--L

Nominal Size	PART NUMBER			ROLLER		STUD				Approx. Weight [lbs]	
	Slotted Head	Slotted Head & Sealed	HexLube® Socket Head & Sealed	**D** +.000 - .001	**B** +.000 - .005	**SD** +.001 - .000	**SL** Shank Length	**TL** Eff. Thread Length	Thread Class 2A		
1/2	**H 16**	**H 16 L**	**H 16 LW**	.5000	.375	.2500	.625	.250	1/4-28	.026	
9/16	**H 18**	**H 18 L**	**H 18 LW**	.5625	.375	.2500	.625	.250	1/4-28	.034	
5/8	**H 20**	**H 20 L**	**H 20 LW**	.6250	.438	.3125	.750	.312	5/16-24	.057	
11/16	**H 22**	**H 22 L**	**H 22 LW**	.6875	.438	.3125	.750	.312	5/16-24	.068	
3/4	**H 24**	**H 24 L**	**H 24 LW**	.7500	.500	.4375	.875	.375	7/16-20	.083	
7/8	**H 28**	**H 28 L**	**H 28 LW**	.8750	.500	.4375	.875	.375	7/16-20	.119	
1	**H 32**	**H 32 L**	**H 32 LW**	1.0000	.625	.6250	1.000	.500	5/8-18	.200	
1 1/8	**H 36**	**H 36 L**	**H 36 LW**	1.1250	.625	.6250	1.000	.500	5/8-18	.250	
1 1/4	**H 40**	**H 40 L**	**H 40 LW**	1.2500	.750	.7500	1.250	.625	3/4-16	.380	
1 3/8	**H 44**	**H 44 L**	**H 44 LW**	1.3750	.750	.7500	1.250	.625	3/4-16	.440	
1 1/2	**H 48**	**H 48 L**	**H 48 LW**	1.5000	.875	.8750	1.500	.750	7/8-14	.630	
1 5/8	**H 52**	**H 52 L**	**H 52 LW**	1.6250	.875	.8750	1.500	.750	7/8-14	.690	
1 3/4	**H 56**	**H 56 L**	**H 56 LW**	1.7500	1.000	1.0000	1.750	.875	1-14	.980	
1 7/8	**H 60**	**H 60 L**	**H 60 LW**	1.8750	1.000	1.0000	1.750	.875	1-14	1.080	
2	**H 64**	**H 64 L**	**H 64 LW**	2.0000	1.250	1.1250	2.000	1.000	1 1/8-12	1.550	
2 1/4	**H 72**	**H 72 L**	**H 72 LW**	2.2500	1.250	1.1250	2.000	1.000	1 1/8-12	1.900	
2 1/2	**H 80**	**H 80 L**	**H 80 LW**	2.5000	1.500	1.2500	2.250	1.125	1 1/4-12	2.700	
2 3/4	**H 88**	**H 88 L**	**H 88 LW**	2.7500	1.500	1.2500	2.250	1.125	1 1/4-12	3.140	
3	**H 96**	**H 96 L**	**H 96 LW**	3.0000	1.750	1.5000	2.500	1.250	1 1/2-12	4.420	
3 1/4	**H 104**	**H 104 L**	**H 104 LW**	3.2500	1.750	1.5000	2.500	1.250	1 1/2-12	5.150	
3 1/2	**H 112**	**H 112 L**	**H 112 LW**	3.5000	2.000	1.7500	2.750	1.375	1 3/4-12	6.950	
4	**H 128**	**H 128 L**	**H 128 LW**	4.0000	2.250	2.0000	3.500	1.500	2-12	10.300	
5	-	-	**H 160 LW**	5.0000	2.750	2.5000	5.062	2.562	2 1/2-12	21.400	
6	-	-	**H 192 LW**	6.0000	3.250	3.0000	6.000	3.000	3-12	36.400	
7	-	-	**H 224 LW**	7.0000	3.750	3.5000	7.688	4.125	3 1/2- 4	59.200	

All dimensions are in inches.

1 1/16 inch for sizes H 160 LW and larger.

HexLube® Universal Cam Followers

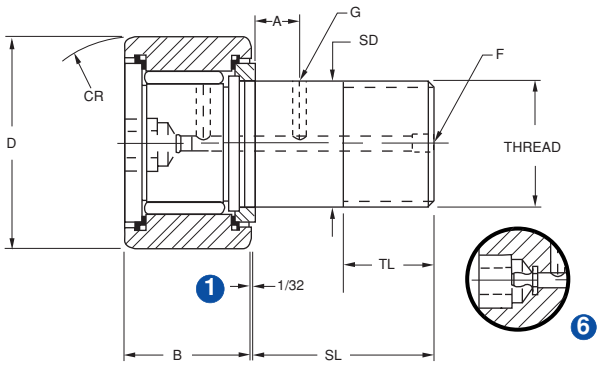

Series H--LW

F Lube Fitting ③	A Loc.	G Dia.	Socket Head Wrench Size	Speed Limit [rpm]	CAPACITIES: Dynamic Capacity C [lbf]	CAPACITIES: Static Capacity C_O [lbf] ⑤	CAPACITIES: Max. Allow. Load [lbf]	CAPACITIES: Track Capacity at 40 Rc [lbf]	MOUNTING DATA: Max.④ Clamping Torque [in∗lbf]	MOUNTING DATA: Housing Bore +.0005 - .0000	MOUNTING DATA: Min. Boss Dia.	Basic Number
②	-	-	1/8	5,000	770	1,590	700	430	20	.2500	.34	**-16**
②	-	-	1/8	5,000	770	1,590	700	480	20	.2500	.34	**-18**
②	-	-	1/8	5,000	970	2,500	1,200	770	55	.3125	.47	**-20**
②	-	-	1/8	5,000	970	2,500	1,200	850	55	.3125	.47	**-22**
3/16	.250	.093	3/16	5,000	1,800	4,150	2,920	1,070	150	.4375	.60	**-24**
3/16	.250	.093	3/16	5,000	1,800	4,150	2,920	1,240	150	.4375	.60	**-28**
3/16	.250	.093	1/4	4,500	2,300	6,150	4,100	1,690	390	.6250	.78	**-32**
3/16	.250	.093	1/4	4,500	2,300	6,150	4,100	1,900	390	.6250	.78	**-36**
3/16	.312	.093	1/4	3,900	4,000	8,500	5,800	2,440	750	.7500	1.00	**-40**
3/16	.312	.093	1/4	3,900	4,000	8,500	5,800	2,680	750	.7500	1.00	**-44**
3/16	.375	.093	5/16	3,100	4,900	11,300	7,900	3,320	900	.8750	1.09	**-48**
3/16	.375	.093	5/16	3,100	4,900	11,300	7,900	3,600	900	.8750	1.09	**-52**
3/16	.437	.125	5/16	2,600	6,400	15,850	11,400	4,550	1,350	1.0000	1.25	**-56**
3/16	.437	.125	5/16	2,600	6,400	15,850	11,400	4,900	1,350	1.0000	1.25	**-60**
3/16	.500	.125	7/16	2,200	9,600	21,200	16,700	6,500	1,700	1.1250	1.40	**-64**
3/16	.500	.125	7/16	2,200	9,600	21,200	16,700	7,300	1,700	1.1250	1.40	**-72**
3/16	.562	.125	1/2	2,000	12,900	33,000	25,400	9,400	2,050	1.2500	1.70	**-80**
3/16	.562	.125	1/2	2,000	12,900	33,000	25,400	10,400	2,050	1.2500	1.70	**-88**
1/4	.625	.187	5/8	1,600	17,000	49,900	36,600	13,300	3,000	1.5000	2.00	**-96**
1/4	.625	.187	5/8	1,600	17,000	49,900	36,600	14,400	3,000	1.5000	2.00	**-104**
1/4	.687	.187	5/8	1,400	24,300	63,250	51,000	17,300	3,000	1.7500	2.45	**-112**
1/4	.750	.187	3/4	1,300	25,600	89,550	68,000	22,000	3,000	2.0000	2.75	**-128**
1/4 NPT	.875	.187	7/8	1,000	44,900	136,000	99,000	35,000	3,000	2.5000	3.25	**-160**
1/4 NPT	1.000	.187	1	800	61,600	161,300	160,000	52,000	3,000	3.0000	4.00	**-192**
1/4 NPT	1.250	.187	1 1/4	700	79,400	237,800	217,000	71,000	3,000	3.5000	4.50	**-224**

② Sizes H 16 through H 22 and H 16 L through H 22 L have a 1/8" hole at the flange end only.
③ Sizes H 16 LW through H 22 LW cannot be relubricated.
④ Torque may be doubled for completely dry threads.
⑤ Bearing Static Capacity provided for comparison only.
⑥ HexLube® Cam Followers can be regreased through the hex head using a Lincoln #5803 or Alemite #6785 needle nozzle adapter.

Crowned Cam Followers

Heavy Stud

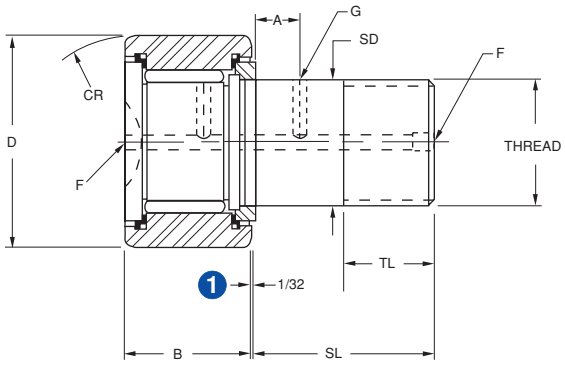

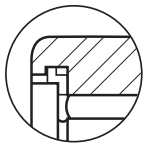

with Glide-A-Seal®

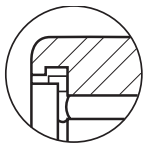

without seal

Series CH--L

Nominal Size	PART NUMBER		ROLLER			STUD				Approx Weight [lbs]	
	Slotted Head & Sealed	HexLube® Socket Head & Sealed	**D** +.000 - .001	**B** +.000 - .005	**CR** Crown Radius	**SD** +.001 - .000	**SL** Shank Length	**TL** Eff. Thread Length	Thread Class 2A		
1/2	**CH 16 L**	**CH 16 LW**	.5000	.375	7	.2500	.625	.250	1/4-28	.026	
9/16	**CH 18 L**	**CH 18 LW**	.5625	.375	7	.2500	.625	.250	1/4-28	.034	
5/8	**CH 20 L**	**CH 20 LW**	.6250	.438	8	.3125	.750	.312	5/16-24	.057	
11/16	**CH 22 L**	**CH 22 LW**	.6875	.438	8	.3125	.750	.312	5/16-24	.068	
3/4	**CH 24 L**	**CH 24 LW**	.7500	.500	10	.4375	.875	.375	7/16-20	.083	
7/8	**CH 28 L**	**CH 28 LW**	.8750	.500	10	.4375	.875	.375	7/16-20	.119	
1	**CH 32 L**	**CH 32 LW**	1.0000	.625	12	.6250	1.000	.500	5/8-18	.200	
1 1/8	**CH 36 L**	**CH 36 LW**	1.1250	.625	12	.6250	1.000	.500	5/8-18	.250	
1 1/4	**CH 40 L**	**CH 40 LW**	1.2500	.750	14	.7500	1.250	.625	3/4-16	.380	
1 3/8	**CH 44 L**	**CH 44 LW**	1.3750	.750	14	.7500	1.250	.625	3/4-16	.440	
1 1/2	**CH 48 L**	**CH 48 LW**	1.5000	.875	20	.8750	1.500	.750	7/8-14	.630	
1 5/8	**CH 52 L**	**CH 52 LW**	1.6250	.875	20	.8750	1.500	.750	7/8-14	.690	
1 3/4	**CH 56 L**	**CH 56 LW**	1.7500	1.000	20	1.0000	1.750	.875	1-14	.980	
1 7/8	**CH 60 L**	**CH 60 LW**	1.8750	1.000	20	1.0000	1.750	.875	1-14	1.080	
2	**CH 64 L**	**CH 64 LW**	2.0000	1.250	24	1.1250	2.000	1.000	1 1/8-12	1.550	
2 1/4	**CH 72 L**	**CH 72 LW**	2.2500	1.250	24	1.1250	2.000	1.000	1 1/8-12	1.900	
2 1/2	**CH 80 L**	**CH 80 LW**	2.5000	1.500	30	1.2500	2.250	1.125	1 1/4-12	2.700	
2 3/4	**CH 88 L**	**CH 88 LW**	2.7500	1.500	30	1.2500	2.250	1.125	1 1/4-12	3.140	
3	**CH 96 L**	**CH 96 LW**	3.0000	1.750	30	1.5000	2.500	1.250	1 1/2-12	4.420	
3 1/4	**CH 104 L**	**CH 104 LW**	3.2500	1.750	30	1.5000	2.500	1.250	1 1/2-12	5.150	
3 1/2	**CH 112 L**	**CH 112 LW**	3.5000	2.000	30	1.7500	2.750	1.375	1 3/4-12	6.950	
4	**CH 128 L**	**CH 128 LW**	4.0000	2.250	30	2.0000	3.500	1.500	2-12	10.300	
5	-	**CH 160 LW**	5.0000	2.750	48	2.5000	5.062	2.562	2 1/2-12	21.400	
6	-	**CH 192 LW**	6.0000	3.250	56	3.0000	6.000	3.000	3-12	36.400	
7	-	**CH 224 LW**	7.0000	3.750	60	3.5000	7.688	4.125	3 1/2- 4	59.200	

All dimensions are in inches.

1 1/16" for size CH 160 LW and larger.

HexLube® Universal Cam Followers

Heavy Stud

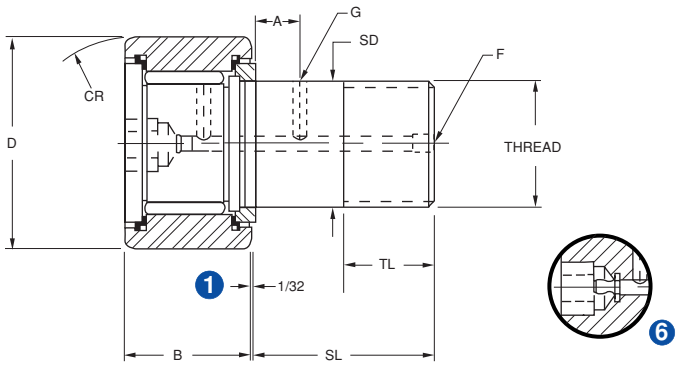

Series CH--LW

	F Lube Fitting ❸	A Loc.	G Dia.	Socket Head Wrench Size	Speed Limit [rpm]	CAPACITIES				MOUNTING DATA			Basic Number
						Dynamic Capacity C [lbf]	Static Capacity C_O [lbf] ❺	Max. Allow. Load [lbf]	Track Capacity at 40 Rc [lbf]	Max. ❹ Clamping Torque [in∗lbf]	Housing Bore +.0005 - .0000	Min. Boss Dia.	
	❷	-	-	1/8	5,000	770	1,590	700	430	20	.2500	.34	**-16**
	❷	-	-	1/8	5,000	770	1,590	700	480	20	.2500	.34	**-18**
	❷	-	-	1/8	5,000	970	2,500	1,200	770	55	.3125	.47	**-20**
	❷	-	-	1/8	5,000	970	2,500	1,200	850	55	.3125	.47	**-22**
	3/16	.250	.093	3/16	5,000	1,800	4,150	2,920	1,070	150	.4375	.60	**-24**
	3/16	.250	.093	3/16	5,000	1,800	4,150	2,920	1,240	150	.4375	.60	**-28**
	3/16	.250	.093	1/4	4,500	2,300	6,150	4,100	1,690	390	.6250	.78	**-32**
	3/16	.250	.093	1/4	4,500	2,300	6,150	4,100	1,900	390	.6250	.78	**-36**
	3/16	.312	.093	1/4	3,900	4,000	8,500	5,800	2,440	750	.7500	1.00	**-40**
	3/16	.312	.093	1/4	3,900	4,000	8,500	5,800	2,680	750	.7500	1.00	**-44**
	3/16	.375	.093	5/16	3,100	4,900	11,300	7,900	3,320	900	.8750	1.09	**-48**
	3/16	.375	.093	5/16	3,100	4,900	11,300	7,900	3,600	900	.8750	1.09	**-52**
	3/16	.437	.125	5/16	2,600	6,400	15,850	11,400	4,550	1,350	1.0000	1.25	**-56**
	3/16	.437	.125	5/16	2,600	6,400	15,850	11,400	4,900	1,350	1.0000	1.25	**-60**
	3/16	.500	.125	7/16	2,200	9,600	21,200	16,700	6,500	1,700	1.1250	1.40	**-64**
	3/16	.500	.125	7/16	2,200	9,600	21,200	16,700	7,300	1,700	1.1250	1.40	**-72**
	3/16	.562	.125	1/2	2,000	12,900	33,000	25,400	9,400	2,050	1.2500	1.70	**-80**
	3/16	.562	.125	1/2	2,000	12,900	33,000	25,400	10,400	2,050	1.2500	1.70	**-88**
	1/4	.625	.187	5/8	1,600	17,000	49,900	36,600	13,300	3,000	1.5000	2.00	**-96**
	1/4	.625	.187	5/8	1,600	17,000	49,900	36,600	14,400	3,000	1.5000	2.00	**-104**
	1/4	.687	.187	5/8	1,400	24,300	63,250	51,000	17,300	3,000	1.7500	2.45	**-112**
	1/4	.750	.187	3/4	1,300	25,600	89,550	68,000	22,000	3,000	2.0000	2.75	**-128**
	1/4 NPT	.875	.187	7/8	1,000	44,900	136,000	99,000	35,000	3,000	2.5000	3.25	**-160**
	1/4 NPT	1.000	.187	1	800	61,600	161,300	160,000	52,000	3,000	3.0000	4.00	**-192**
	1/4 NPT	1.250	.187	1 1/4	700	79,400	237,800	217,000	71,000	3,000	3.5000	4.50	**-224**

❷ Sizes CH 16 L through CH 22 L have a 1/8 inch hole at the flange end only.
❸ Sizes CH 16 LW through CH 22 LW cannot be relubricated.
❹ Torque may be doubled for completely dry threads.
❺ Bearing Static Capacity provided for comparison only.
❻ HexLube® Cam Followers can be regreased through the hex head using a Lincoln #5803 or Alemite #6785 needle nozzle adapter.

Yoke Rollers

Cylindrical and Crowned O.D.

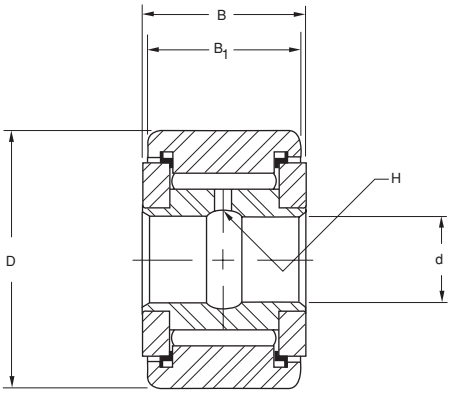

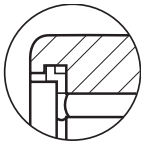

with Glide-A-Seal®

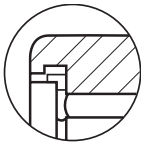

without seal

Series Y, Y--L

Nominal Size	PART NUMBER			ROLLER			d INSIDE DIAMETER			B Overall Width +.005 - .010	H Oil Hole
	Without Seals	With Seals	Sealed & Crowned O.D.	D +.000 - .001	B_1 +.000 - .005	CR Crown Radius	Nom.	Min.	Max.		
3/4	**Y 24**	**Y 24 L**	**CY 24 L**	.750	.500	10	1/4	.2496	.2502	.5625	.093
7/8	**Y 28**	**Y 28 L**	**CY 28 L**	.875	.500	10	1/4	.2496	.2502	.5625	.093
1	**Y 32**	**Y 32 L**	**CY 32 L**	1.000	.625	12	5/16	.3121	.3127	.6875	.093
1 1/8	**Y 36**	**Y 36 L**	**CY 36 L**	1.125	.625	12	5/16	.3121	.3127	.6875	.093
1 1/4	**Y 40**	**Y 40 L**	**CY 40 L**	1.250	.750	14	3/8	.3746	.3752	.8125	.093
1 3/8	**Y 44**	**Y 44 L**	**CY 44 L**	1.375	.750	14	3/8	.3746	.3752	.8125	.093
1 1/2	**Y 48**	**Y 48 L**	**CY 48 L**	1.500	.875	20	7/16	.4371	.4377	.9375	.093
1 5/8	**Y 52**	**Y 52 L**	**CY 52 L**	1.625	.875	20	7/16	.4371	.4377	.9375	.093
1 3/4	**Y 56**	**Y 56 L**	**CY 56 L**	1.750	1.000	20	1/2	.4996	.5002	1.0625	.093
1 7/8	**Y 60**	**Y 60 L**	**CY 60 L**	1.875	1.000	20	1/2	.4996	.5002	1.0625	.093
2	**Y 64**	**Y 64 L**	**CY 64 L**	2.000	1.250	24	5/8	.6246	.6252	1.3125	.093
2 1/4	**Y 72**	**Y 72 L**	**CY 72 L**	2.250	1.250	24	5/8	.6246	.6252	1.3125	.093
2 1/2	**Y 80**	**Y 80 L**	**CY 80 L**	2.500	1.500	30	3/4	.7496	.7502	1.5625	.125
2 3/4	**Y 88**	**Y 88 L**	**CY 88 L**	2.750	1.500	30	3/4	.7496	.7502	1.5625	.125
3	**Y 96**	**Y 96 L**	**CY 96 L**	3.000	1.750	30	1	.9995	1.0001	1.8125	.125
3 1/4	**Y 104**	**Y 104 L**	**CY 104 L**	3.250	1.750	30	1	.9995	1.0001	1.8125	.125
3 1/2	**Y 112**	**Y 112 L**	**CY 112 L**	3.500	2.000	30	1 1/8	1.1245	1.1251	2.0625	.125
4	**Y 128**	**Y 128 L**	**CY 128 L**	4.000	2.250	30	1 1/4	1.2495	1.2501	2.3125	.125
5	**Y 160**	**Y 160 L**	**CY 160 L**	5.000	2.750	48	1 3/4	1.7495	1.7501	2.8750	.187
6	**Y 192**	**Y 192 L**	**CY 192 L**	6.000	3.250	56	2 1/4	2.2495	2.2501	3.3750	.187
7	**Y 224**	**Y 224 L**	**CY 224 L**	7.000	3.750	60	2 3/4	2.7495	2.7501	3.8750	.187

All dimensions are in inches.

Axial clamping of the inner ring is recommended.

Yoke Rollers

Cylindrical and Crowned O.D.

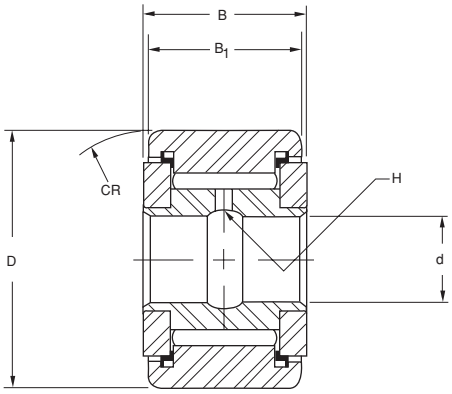

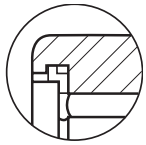

with Glide-A-Seal®

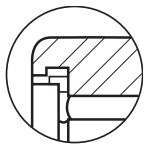

without seal

Series CY--L

Speed Limit [rpm]	CAPACITIES			MOUNTING DATA				Min. Boss Dia.	Approx. Weight [lbs]	Basic Number
	Dynamic Capacity C [lbf] ❶	Static Capacity C_O [lbf] ❷	Track Capacity @ 40 Rc [lbf]	Transition Fit		Press Fit				
				Max.	Min.	Max.	Min.			
3,930	1,800	4,150	880	.2497	.2493	.2505	.2501	.50	.051	**-24**
3,930	1,800	4,150	1,030	.2497	.2493	.2505	.2501	.50	.067	**-28**
3,140	2,300	6,150	1,690	.3122	.3118	.3130	.3126	.64	.115	**-32**
3,140	2,300	6,150	1,900	.3122	.3118	.3130	.3126	.64	.150	**-36**
2,620	4,200	8,500	2,440	.3747	.3743	.3755	.3751	.76	.200	**-40**
2,620	4,200	8,500	2,680	.3747	.3743	.3755	.3751	.76	.260	**-44**
2,250	5,000	11,300	3,320	.4372	.4368	.4380	.4376	.89	.350	**-48**
2,250	5,000	11,300	3,600	.4372	.4368	.4380	.4376	.89	.440	**-52**
1,970	6,400	15,850	4,550	.4997	.4993	.5007	.5003	1.05	.580	**-56**
1,970	6,400	15,850	4,900	.4997	.4993	.5007	.5003	1.05	.670	**-60**
1,570	9,600	21,200	6,500	.6247	.6243	.6257	.6253	1.20	.920	**-64**
1,570	9,600	21,200	7,300	.6247	.6243	.6257	.6253	1.20	1.230	**-72**
1,310	12,800	33,000	9,400	.7497	.7493	.7507	.7503	1.31	1.750	**-80**
1,310	12,800	33,000	10,400	.7497	.7493	.7507	.7503	1.31	2.200	**-88**
1,060	17,000	49,900	13,300	.9996	.9991	1.0008	1.0003	2.00	2.880	**-96**
1,060	17,000	49,900	14,400	.9996	.9991	1.0008	1.0003	2.00	3.490	**-104**
980	24,300	63,250	17,300	1.1246	1.1241	1.1258	1.1253	2.39	4.520	**-112**
940	30,000	89,550	22,000	1.2496	1.2491	1.2508	1.2503	2.62	6.760	**-128**
720	47,200	136,000	35,000	1.7496	1.7491	1.7508	1.7503	3.50	12.700	**-160**
590	62,900	165,500	52,000	2.2496	2.2491	2.2508	2.2503	4.50	21.400	**-192**
520	79,400	237,800	71,000	2.7496	2.7491	2.7508	2.7503	5.25	34.200	**-224**

❶ Normal operating loads should not exceed 50% of the bearing dynamic capacity.
❷ Bearing Static Capacity provided for comparison only.

Caged Roller Followers

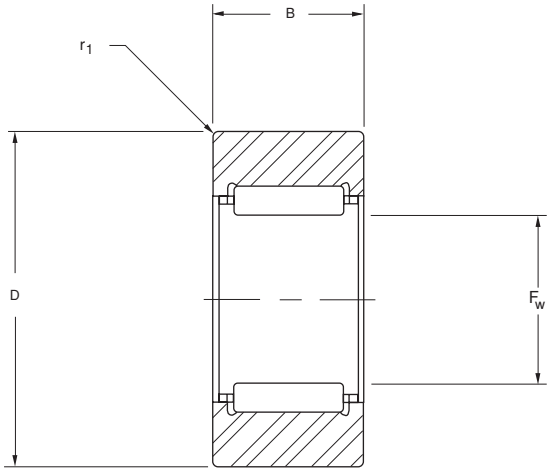

Series SRF without seals

PART NUMBER	ROLLER D Max.	ROLLER D Min.	B +.000 - .005	F_w Inside Diameter Nominal	F_w Inside Diameter Min.	F_w Inside Diameter Max.	r_1 Corner Radius	Approx. Weight [lbs]	Matching Inner Rings (See page 28)
SRF 20	1.000	.999	.495	1/2	.5005	.5014	.04	.066	—
SRF 20 SS	1.000	.999	.620	1/2	.5005	.5014	.04	.076	—
SRF 25	1.250	1.249	.620	5/8	.6258	.6267	.06	.129	—
SRF 25 SS	1.250	1.249	.620	5/8	.6258	.6267	.06	.140	—
SRF 30	1.500	1.499	.745	3/4	.7509	.7518	.06	.230	IR 7153, IR 7153 C
SRF 30 SS	1.500	1.499	.745	3/4	.7509	.7518	.06	.230	IR 7153, IR 7153 C
SRF 35	1.750	1.749	.745	7/8	.8759	.8768	.06	.320	IR 7173, IR 7173 C
SRF 35 SS	1.750	1.749	.745	7/8	.8759	.8768	.06	.330	IR 7173, IR 7173 C
SRF 40	2.000	1.999	.995	1	1.0009	1.0018	.08	.590	IR 7194, IR 7194 C
SRF 40 SS	2.000	1.999	.995	1	1.0009	1.0018	.08	.560	IR 7194, IR 7194 C
SRF 45	2.250	2.249	.995	1 1/4	1.2510	1.2519	.08	.690	IR 7234
SRF 45 SS	2.250	2.249	.995	1 1/4	1.2510	1.2519	.08	.580	IR 7234
SRF 50	2.500	2.499	.995	1 3/8	1.3760	1.3769	.08	.860	IR 7254, IR 7254 D
SRF 50 SS	2.500	2.499	.995	1 3/8	1.3760	1.3769	.08	.860	IR 7254, IR 7254 D
SRF 55	2.750	2.749	1.245	1 1/2	1.5010	1.5019	.08	1.340	IR 7275, IR 7275 C
SRF 55 SS	2.750	2.749	1.245	1 1/2	1.5010	1.5019	.08	1.310	IR 7275, IR 7275 C
SRF 60	3.000	2.999	1.245	1 5/8	1.6260	1.6269	.08	1.610	IR 7295, IR 7295 C
SRF 65	3.250	3.249	1.245	1 3/4	1.7510	1.7520	.10	1.910	IR 7315, IR 7315 C
SRF 70	3.500	3.499	1.245	1 7/8	1.8760	1.8770	.10	2.230	IR 7335
SRF 75	3.750	3.749	1.245	2	2.0011	2.0021	.10	2.590	IR 7355, IR 7355 D
SRF 80	4.000	3.999	1.245	2 1/4	2.2511	2.2521	.10	2.750	IR 8405, IR 8405 D

All dimensions are in inches.

Normal operating loads should not exceed the bearing dynamic capacity.

Roller followers used without inner rings require a shaft with minimum hardness of Rc 58 and surface finish of 16 rms or better.

Standard configuration of roller follower series SRF-- SS is with seal lips facing outward. To specify roller followers with seal lips facing inward, replace suffix -SS with suffix -RR. (example: SRF 30 RR).

Caged Roller Followers

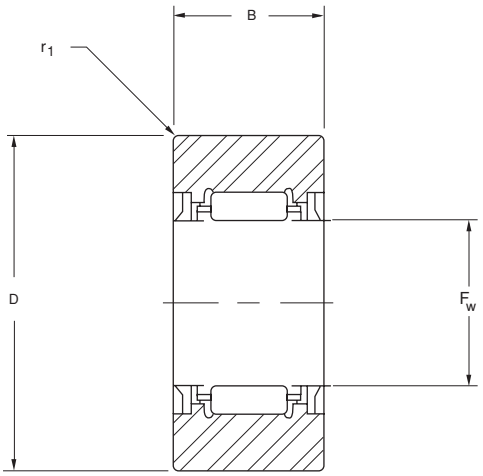

Series SRF--SS with seals

CAPACITIES			Critical Angle [deg] ❷	Speed Limit (grease) [rpm] ❸	Recommended Shaft Diameter (without Inner Ring)		PART NUMBER
Dynamic Capacity C [lbf]	Static Capacity C_O [lbf] ❶	Track Capacity @ 40 Rc [lbf]			Max.	Min.	
1,900	2,200	1,280	60.0	10,900	.5000	.4996	**SRF 20**
1,200	1,300	1,650	60.0	7,600	.5000	.4996	**SRF 20 SS**
2,700	3,300	1,950	60.1	8,700	.6250	.6246	**SRF 25**
1,600	1,600	1,950	60.1	6,100	.6250	.6246	**SRF 25 SS**
4,400	5,900	2,900	50.5	7,200	.7500	.7496	**SRF 30**
2,300	2,700	2,900	51.2	5,100	.7500	.7496	**SRF 30 SS**
4,700	6,500	3,400	47.5	6,200	.8750	.8745	**SRF 35**
2,400	3,000	3,400	48.1	4,400	.8750	.8746	**SRF 35 SS**
6,900	11,300	5,200	41.8	5,400	1.0000	.9995	**SRF 40**
5,000	7,500	5,200	41.8	3,800	1.0000	.9995	**SRF 40 SS**
7,800	13,900	5,800	35.6	4,300	1.2500	1.2495	**SRF 45**
4,900	8,400	5,800	36.0	3,100	1.2500	1.2495	**SRF 45 SS**
8,300	15,700	6,450	32.3	3,900	1.3750	1.3745	**SRF 50**
5,100	8,900	6,450	34.4	2,800	1.3750	1.3745	**SRF 50 SS**
11,500	22,800	9,250	32.3	3,600	1.5000	1.4995	**SRF 55**
8,000	15,800	9,250	31.2	2,500	1.5000	1.4995	**SRF 55 SS**
9,400	20,700	10,100	30.1	3,300	1.6250	1.6245	**SRF 60**
12,500	26,600	10,500	28.5	3,000	1.7500	1.7495	**SRF 65**
10,100	23,800	11,300	26.8	2,800	1.8750	1.8745	**SRF 70**
10,600	25,800	12,100	24.9	2,700	2.0000	1.9994	**SRF 75**
12,700	26,700	12,950	28.8	2,300	2.2500	2.2494	**SRF 80**

❶ Bearing Static Capacity provided for comparison only.

❷ For oscillatory application with angle of oscillation less than critical angle, consult RBC engineering department for revised fatigue calculation.

❸ Speed limit of sealed roller followers is determined by maximum seal surface speed. For roller followers without seals, speed limit may be increased by 30% with oil lubrication.

Precision Ground Inner Rings

For Use with Caged Roller Followers

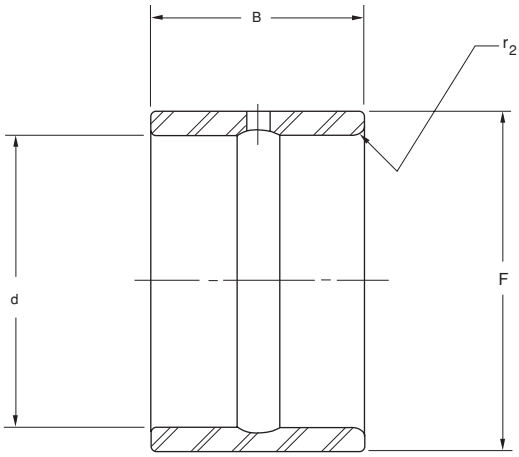

Series IR

PART NUMBER	d Inside Diameter			F Outside Diameter			B Width + .000 - .005	r_2 Shaft Fillet Max
	Nominal	Min.	Max.	Nominal	Max.	Min.		
IR 7153	1/2	.4996	.5000	3/4	.7493	.7488	.760	.04
IR 7153 C	9/16	.5621	.5625	3/4	.7493	.7488	.760	.04
IR 7173	5/8	.6246	.6250	7/8	.8743	.8738	.760	.04
IR 7173 C	11/16	.6871	.6875	7/8	.8743	.8738	.760	.04
IR 7194	3/4	.7496	.7500	1	.9993	.9988	1.010	.04
IR 7194 C	13/16	.8120	.8125	1	.9993	.9988	1.010	.04
IR 7234	1	.9995	1.0000	1 1/4	1.2491	1.2485	1.010	.04
IR 7254 D	1	.9995	1.0000	1 3/8	1.3741	1.3735	1.010	.04
IR 7254	1 1/8	1.1245	1.1250	1 3/8	1.3741	1.3735	1.010	.04
IR 7275	1 3/16	1.1870	1.1875	1 1/2	1.4990	1.4984	1.260	.06
IR 7275 C	1 1/4	1.2495	1.2500	1 1/2	1.4990	1.4984	1.260	.06
IR 7295	1 5/16	1.3120	1.3125	1 5/8	1.6240	1.6234	1.260	.06
IR 7295 C	1 3/8	1.3745	1.3750	1 5/8	1.6240	1.6234	1.260	.06
IR 7315	1 7/16	1.4370	1.4375	1 3/4	1.7490	1.7484	1.260	.06
IR 7315 C	1 1/2	1.4995	1.5000	1 3/4	1.7490	1.7484	1.260	.06
IR 7335	1 9/16	1.5620	1.5625	1 7/8	1.8740	1.8734	1.260	.06
IR 7355 D	1 5/8	1.6245	1.6250	2	1.9989	1.9982	1.260	.06
IR 7355	1 11/16	1.6870	1.6875	2	1.9989	1.9982	1.260	.06
IR 8405 D	1 11/16	1.6870	1.6875	2 1/4	2.2489	2.2482	1.260	.06
IR 8405	1 3/4	1.7495	1.7500	2 1/4	2.2489	2.2482	1.260	.06

All dimensions are in inches.

Precision Ground Inner Rings
For Use with Caged Roller Followers

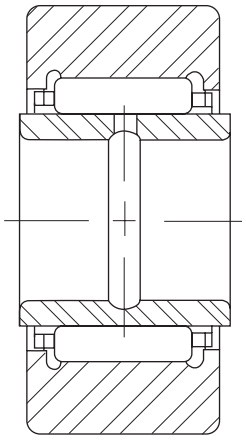

Series SRF with Inner Ring

Approx. Weight [lbs]	Matching Roller Followers (See page 26)	RECOMMENDED SHAFT DIAMETER						PART NUMBER
		Transition Fit - ISO g6			Press Fit - ISO m5			
		Max.	Min.	Mean Fit	Max.	Min.	Mean Fit	
.050	SRF 30, SRF 30 SS	.4997	.4993	.0003L	.5006	.5003	.0006T	**IR 7153**
.040	SRF 30, SRF 30 SS	.5622	.5618	.0003L	.5631	.5628	.0006T	**IR 7153 C**
.059	SRF 35, SRF 35 SS	.6247	.6243	.0003L	.6256	.6253	.0006T	**IR 7173**
.046	SRF 35, SRF 35 SS	.6872	.6868	.0003L	.6881	.6878	.0006T	**IR 7173 C**
.094	SRF 40, SRF 40 SS	.7497	.7492	.0003L	.7507	.7503	.0007T	**IR 7194**
.072	SRF 40, SRF 40 SS	.8122	.8117	.0003L	.8132	.8128	.0007T	**IR 7194 C**
.121	SRF 45, SRF 45 SS	.9997	.9992	.0003L	1.0007	1.0003	.0007T	**IR 7234**
.192	SRF 50, SRF 50 SS	.9997	.9992	.0003L	1.0007	1.0003	.0007T	**IR 7254 D**
.134	SRF 50, SRF 50 SS	1.1247	1.1242	.0003L	1.1257	1.1253	.0008T	**IR 7254**
.228	SRF 55, SRF 55 SS	1.1871	1.1865	.0004L	1.1883	1.1879	.0008T	**IR 7275**
.183	SRF 55, SRF 55 SS	1.2496	1.2490	.0004L	1.2508	1.2504	.0008T	**IR 7275 C**
.247	SRF 60	1.3121	1.3115	.0004L	1.3133	1.3129	.0008T	**IR 7295**
.201	SRF 60	1.3746	1.3740	.0004L	1.3758	1.3754	.0008T	**IR 7295 C**
.269	SRF 65	1.4371	1.4365	.0004L	1.4383	1.4379	.0008T	**IR 7315**
.217	SRF 65	1.4996	1.4990	.0004L	1.5008	1.5004	.0008T	**IR 7315 C**
.288	SRF 70	1.5621	1.5615	.0004L	1.5633	1.5629	.0008T	**IR 7335**
.366	SRF 75	1.6246	1.6240	.0004L	1.6258	1.6254	.0008T	**IR 7355 D**
.308	SRF 75	1.6871	1.6865	.0004L	1.6883	1.6879	.0008T	**IR 7355**
.609	SRF 80	1.6871	1.6865	.0004L	1.6883	1.6879	.0008T	**IR 8405 D**
.544	SRF 80	1.7496	1.7490	.0004L	1.7508	1.7504	.0008T	**IR 8405**

Mast Guide and Carriage Rollers

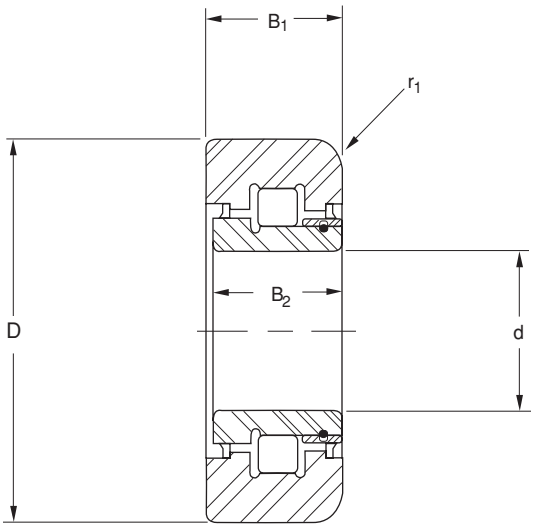

PART NUMBER	d Inside Diameter			D Outside Diameter		B_2 Inner Ring Width	B_1 Outer Ring Width	r_1 Corner Radius	Dynamic Capacity C [lbf]	Static Capacity C_O [lbf]
	Nom.	Min.	Max.	Min.	Max.					
75229	3/4	1/2 - 13 thread		2.2490	2.2500	1.4020	0.8120	0.12500	5,300	5,300
75066-10	3/4	.7495	.7500	1.8590	1.8600	0.5500	0.4890	0.04000	5,100	4,900
74392-2	3/4	.7495	.7500	2.2490	2.2500	0.9630	0.9950	0.18750	8,500	9,500
74444	20 mm	.7495	.7500	2.2490	2.2500	0.7740	0.8120	0.12500	5,900	6,000
T75342	7/8	.7870	.7874	2.2432	2.2440	0.5853	0.7283	0.02000	4,800	4,600
T74780-10	25 mm	.8745	.8750	2.2490	2.2500	1.7600	1.7400	0.12000	18,400	31,100
T75016-10	1	.9838	.9843	2.9960	3.0060	1.0250	0.9750	0.33600	10,200	11,400
T74970	1	.9995	1.0000	2.4980	2.5000	1.2700	1.2500	0.08000	11,300	18,300
T74962-10	30 mm	1.0005	1.0010	2.2495	2.2500	1.2600	1.2500	0.04000	11,100	18,000
T74879	1 1/4	1.1798	1.1803	2.7130	2.7280	1.0020	1.0020	0.03125	14,100	18,200
T75016	1 1/4	1.2495	1.2500	2.9960	3.0060	1.0250	0.9750	0.33600	10,200	11,400
74501RR	35 mm	1.2494	1.2500	3.2450	3.2500	1.0000	1.0000	0.08000	11,700	15,300
T74850-10	35 mm	1.3775	1.3780	3.2200	3.2260	0.6690	1.0050	0.12000	10,000	10,300
T74926	35 mm	1.3775	1.3780	3.7170	3.7250	0.8600	1.0000	0.37500	12,800	14,000
74524	35 mm	1.3775	1.3780	3.9700	3.9750	0.8270	1.1300	0.12500	14,600	16,500
74703	35 mm	1.3775	1.3780	3.9700	3.9750	0.8270	1.3000	0.12000	10,100	9,500
74389	35 mm	1.3775	1.3780	3.9990	4.0000	1.1850	1.1850	0.37500	18,600	23,400
74498	35 mm	1.3775	1.3780	3.9990	4.0000	0.9050	1.1880	0.25000	14,600	16,500
74709	35 mm	1.3775	1.3780	3.9990	4.0000	0.8270	1.2600	0.25000	15,000	16,100
T75015-10	1 1/2	1.3775	1.3780	4.0000	4.0100	1.1370	1.0870	0.33600	14,300	15,700
T74908	1 1/2	1.4995	1.5000	2.7400	2.7500	1.5350	1.7460	0.43500	18,300	32,100
T75015		1.4995	1.5000	4.0000	4.0100	1.1370	1.0870	0.33600	14,300	15,700

All dimensions are in inches, unless otherwise noted.

Designs vary and may not be interchangeable.

Confirm correct part number when ordering.

For sizes not listed above, contact RBC.

Contact RBC for additional design characteristics or for assistance with new applications.

Mast Guide and Carriage Rollers

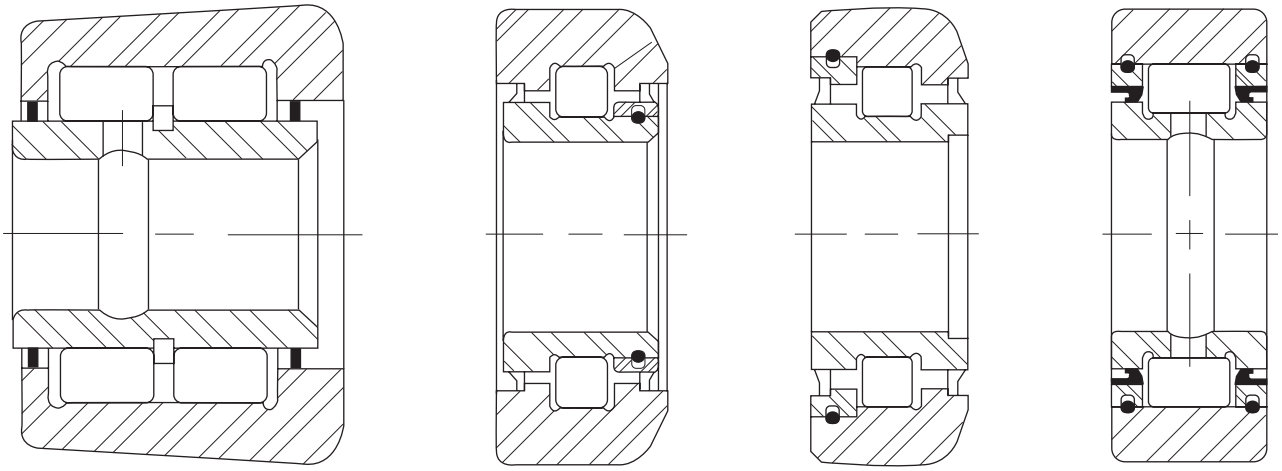

Typical Mast Guide and Carriage Roller Configurations

PART NUMBER	d Inside Diameter			D Outside Diameter		B_2 Inner Ring Width	B_1 Outer Ring Width	r_1 Corner Radius	Dynamic Capacity C [lbf]	Static Capacity C_O [lbf]
	Nom.	Min.	Max.	Min.	Max.					
T74897	1 9/16	1.5599	1.5604	2.7400	2.7500	1.3750	1.6250	0.50000	18,600	33,200
T74997-10	40 mm	1.5743	1.5748	2.9700	2.9800	0.8750	1.0000	0.06000	13,800	20,000
T74997	40 mm	1.5743	1.5748	2.9700	2.9800	0.8750	1.0000	0.06000	13,800	20,000
T75600	45 mm	1.7712	1.7717	3.7200	3.7250	0.7480	1.0000	0.24000	16,200	18,400
T74996	45 mm	1.7712	1.7717	3.4700	3.4800	1.1250	1.2550	0.08000	19,500	26,100
T74794-15	45 mm	1.7712	1.7717	3.9850	3.9900	0.7480	1.1210	0.29000	16,200	18,400
T74924	45 mm	1.7712	1.7717	4.9975	5.0025	1.0400	1.2500	0.31250	19,500	23,500
T74995	50 mm	1.9680	1.9685	3.9720	3.9780	1.1250	1.2550	0.09375	24,100	31,700
T74995-10	50 mm	1.9680	1.9685	4.4720	4.4780	1.1250	1.2550	0.09375	24,100	31,700
74812-10	2	1.9995	2.0000	4.0575	4.0675	1.3420	1.2800	0.12500	19,200	24,900
T74284	2	2.0000	2.0040	3.4700	3.4800	2.8440	1.0000	0.03125	20,100	49,500
T75291	55 mm	2.1648	2.1654	5.3700	5.3900	1.7250	1.8330	0.18750	43,700	56,500
T74966	55 mm	2.1648	2.1654	5.9970	6.0030	1.2300	1.5000	0.43750	37,200	42,900
T74931	55 mm	2.1648	2.1654	6.4300	6.4400	1.0620	2.1350	0.42700	51,600	75,500
T74636-19	2 1/4	2.2494	2.2500	6.4300	6.4400	2.2500	2.2500	0.25000	45,300	54,900
T75003	70 mm	2.7553	2.7559	7.0530	7.0630	2.7500	3.1200	0.46000	76,800	122,900
T74806	2 13/16	2.8119	2.8125	5.0370	5.0400	1.2500	1.2500	0.18750	23,900	38,800
T74947-10	3	2.9994	3.0000	6.2700	6.3700	1.1420	1.5100	0.22500	34,200	45,000
T74711	3	3.0494	3.0500	5.0080	5.0180	1.2500	1.2500	0.18750	26,200	47,600
T75088	80 mm	3.1490	3.1496	7.9970	8.0030	2.6300	3.3800	0.62500	68,200	112,300
T74977	3 1/4	3.2494	3.2500	5.9900	6.0100	2.2500	2.2500	0.12500	59,900	91,400
T74779-11	3 5/8	3.6240	3.6250	6.4300	6.4400	2.1250	2.250	0.31250	53,900	88,500

All dimensions are in inches, unless otherwise noted.

Designs vary and may not be interchangeable; some inner rings are not centered.

Confirm correct part number when ordering.

For sizes not listed above, contact RBC.

Contact RBC for additional design characteristics or for assistance with new applications.

Chain Sheaves

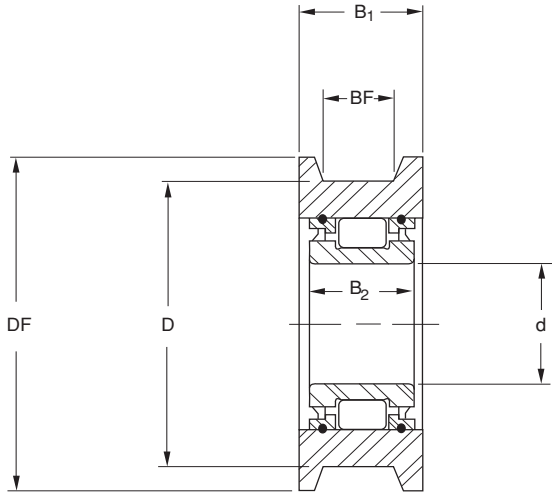

PART NUMBER	d Inside Diameter		D Outside Diameter	DF Flange Diameter	B_2 Inner Ring Width	BF Width between Flanges	B_1 Outer Ring Width	Dynamic Capacity C [lbf]	Static Capacity C_O [lbf]
	Min.	Max.	Nom.	Nom.	Nom.	Nom.	Nom.		
V75582	0.4996	0.5002	1.8930	2.4840	1.1180	0.7200	1.1200	7,800	10,000
V75605	0.7496	0.7505	3.0000	3.3961	1.5669	1.1713	1.5201	13,200	26,400
74393-1	0.7498	0.7503	2.3000	2.6250	1.3700	1.0890	1.3120	11,400	14,300
V75204	0.7500	0.7570	2.2500	2.6250	1.8800	1.4450	1.8150	15,900	33,500
V75204-10	0.7500	0.7570	3.7500	4.1250	1.8800	1.4450	1.8150	17,100	40,300
V75024	0.7870	0.7874	2.2430	3.0030	1.6870	1.1000	1.5670	15,900	21,400
V75606	0.9837	0.9844	3.1555	3.8642	1.9291	1.2854	1.8701	27,200	36,100
V74929-10	0.9839	0.9843	3.3850	3.8850	1.0000	0.9160	1.2080	12,800	14,000
V75431	1.1453	1.1811	3.1614	3.5551	0.7480	1.0945	1.4291	11,900	12,300
V75608	1.3774	1.3780	3.5492	4.2579	1.9291	1.2854	1.8701	21,100	26,800
V75652	1.5743	1.5748	3.7600	4.2500	0.9055	1.0710	1.3520	15,400	18,400
V74899	1.5743	1.5748	3.7600	4.2500	0.9060	1.0000	1.3120	13,600	15,600
V74899-11	1.5743	1.5748	3.5100	4.0000	0.9060	0.8750	1.1250	13,600	15,600
74759	1.7495	1.7500	5.5050	6.1350	1.7600	1.3750	1.7600	44,400	57,800
74797	1.7495	1.7500	3.7250	4.3750	1.5630	1.3750	1.7600	27,000	32,500
V74893	1.7495	1.7500	4.0050	4.3750	1.7850	1.3750	1.7600	27,000	32,500
V75039	1.7712	1.7717	4.0100	4.3850	1.2500	1.3170	1.5000	23,100	25,400
V75031-10	1.7712	1.7717	4.5720	5.0100	1.2500	1.8170	2.2120	24,800	28,100
V74954-10	1.7712	1.7717	3.7280	4.3750	1.4400	1.3750	1.7500	27,000	32,500
V75071-10	1.7712	1.7717	4.2600	4.5700	1.0000	1.0700	1.3500	22,600	25,000
V75294	1.7712	1.7717	4.5100	5.1350	0.9840	1.3750	1.7600	22,600	25,000
V75294	1.9680	1.9685	4.5100	5.0000	1.9250	1.3300	1.9600	32,300	39,600
V74961	3.9993	4.0000	10.0100	11.0100	4.3850	3.6350	4.3850	179,000	299,400
V75029	4.5000	4.5007	10.0100	11.0100	5.5000	4.7500	5.5000	201,700	360,000

All dimensions are in inches.

For sizes not listed above, contact RBC.

Contact RBC for additional design characteristics or for assistance with new applications.

Toothless Sprockets

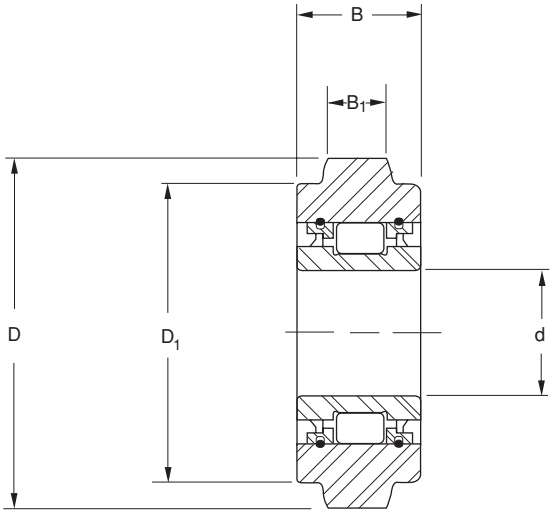

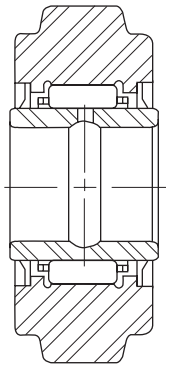

Type A **Type B**

PART NUMBER	Type	d Inside Diameter +0.0000 - 0.0005	D Outside Diameter +0.000 - 0.002	B Width +.000 - .010	B_1 Land Width +.000 - .010	D_1 Shoulder Diameter +.000 - .020	Dynamic Capacity C [lbf]	Static Capacity C_O [lbf]	Suggested Roller Chain Number
74925	A	1.2500	3.140	1.005	.470	2.560	11,100	17,200	60
SJ 74690 ❶❷	B	1.3750	3.427	1.250 ❺	.585	2.915	9,400	20,700	80
SJ 74690 RR ❷	B	1.3750	3.427	1.250 ❺	.585	2.915	9,300	18,200	80
74698-10	A	1.3780	3.174	.690	.459	2.741	8,200	10,300	60
74499-10	A	1.5748	4.057	.906	.575	3.493	11,000	15,600	80
SJ 74839 ❶❸	B	1.7500	4.305	1.500 ❺	.692	3.641	15,100	33,800	100
SJ 74839 SS ❹	B	1.7500	4.305	1.500 ❺	.692	3.641	13,800	28,800	100
75060	A	1.7500	3.755	1.130	.595	3.135	16,800	27,900	80
74990	A	1.7717	3.755	1.130	.595	3.135	15,200	24,700	80
74991	A	1.7717	4.005	1.130	.720	3.135	15,200	24,700	100
74809	A	1.7717	4.683	.989	.692	3.938	13,900	18,000	100
74992 ❻	A	2.5000	4.895	1.255	.940	4.045	20,000	38,300	120

All dimensions are in inches.

For sizes not listed above, contact RBC.

❶ Without seals.
❷ Inner ring part number IR 7295C must be ordered separately.
❸ Inner ring part number IR 8406 H must be ordered separately.
❹ Inner ring part number IR 7439 must be ordered separately.
❺ Inner ring is 0.010 inches wider than outer ring.
❻ Inner ring width 1.125 inches.

Airframe Needle Roller Bearings

Series NBC

PART NUMBER	d Inside Diameter			D Outside Diameter		Width		r_1	D1	P	G	
	Nom.	Max.	Min.	Max.	Min.	B Overall	B_1 Outer ring	Shaft & Housing Fillet	End Plate Dia.	Inner Ring Groove Width	Outer Ring Groove Width	
4 NBC 612 ZP	1/4	.2500	.2493	.7500	.7495	.375	.281	.022	.688	-	.094	
5 NBC 713 ZP	5/16	.3125	.3118	.8125	.8120	.437	.344	.022	.750	-	.094	
6 NBC 914 YZP	3/8	.3750	.3743	.8750	.8745	.562	.469	.022	.812	.188	.125	
7 NBC 1015 YZP	7/16	.4375	.4368	.9375	.9370	.625	.531	.032	.875	.188	.125	
8 NBC 1218 YZP	1/2	.5000	.4993	1.1250	1.1245	.750	.656	.032	1.031	.188	.125	
9 NBC 1419 YZP	9/16	.5625	.5618	1.1875	1.1870	.875	.781	.032	1.094	.188	.156	
10 NBC 1620 YZP	5/8	.6250	.6243	1.2500	1.2495	1.000	.906	.032	1.156	.250	.156	
12 NBC 1822 YZP	3/4	.7500	.7493	1.3750	1.3745	1.125	1.000	.032	1.281	.250	.156	
14 NBC 2026 YZP	7/8	.8750	.8743	1.6250	1.6245	1.250	1.125	.032	1.500	.375	.156	
16 NBC 2028 YZP	1	1.0000	.9993	1.7500	1.7495	1.250	1.125	.032	1.625	.375	.156	
20 NBC 2032 YZP	1 1/4	1.2500	1.2493	2.0000	1.9994	1.250	1.049	.032	1.906	.375	.156	
24 NBC 2036 YZP	1 1/2	1.5000	1.4993	2.2500	2.2494	1.250	1.049	.032	2.156	.375	.156	
28 NBC 2040 YZP	1 3/4	1.7500	1.7493	2.5000	2.4994	1.250	1.049	.032	2.406	.375	.156	
32 NBC 2044 YZP	2	2.0000	1.9993	2.7500	2.7494	1.250	1.049	.032	2.656	.375	.156	
36 NBC 2048 YZP	2 1/4	2.2500	2.2493	3.0000	2.9994	1.250	1.049	.032	2.906	.375	.156	
40 NBC 2052 YZP	2 1/2	2.5000	2.4993	3.2500	3.2492	1.250	1.049	.032	3.156	.375	.156	
44 NBC 2056 YZP	2 3/4	2.7500	2.7493	3.5000	3.4992	1.250	1.049	.032	3.406	.375	.156	
48 NBC 2060 YZP	3	3.0000	2.9993	3.7500	3.7492	1.250	1.049	.032	3.656	.375	.156	
52 NBC 2064 YZP	3 1/4	3.2500	3.2492	4.0000	3.9992	1.250	1.049	.032	3.906	.375	.156	
56 NBC 2070 YZP	3 1/2	3.5000	3.4992	4.3750	4.3742	1.250	1.049	.044	4.219	.375	.156	
60 NBC 2074 YZP	3 3/4	3.7500	3.7492	4.6250	4.6242	1.250	1.049	.044	4.469	.375	.156	
64 NBC 2078 YZP	4	4.0000	3.9992	4.8750	4.8740	1.250	1.049	.044	4.719	.375	.156	

All dimensions are in inches

All exposed surfaces plated for corrosion resistance.

Airframe Needle Roller Bearings

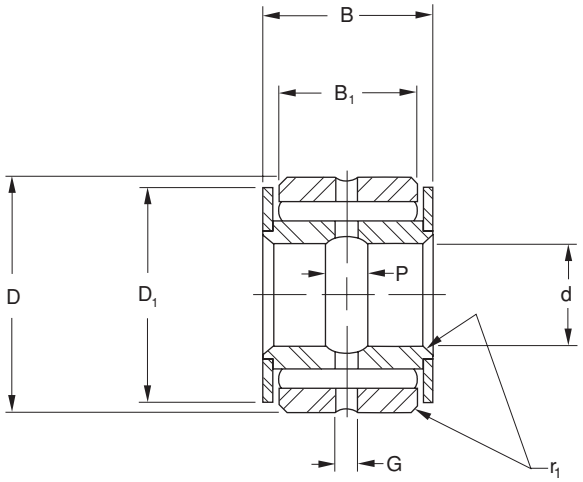

Approx. Weight [lbs]	Speed Limit [rpm]	Load Limit [lbf]	Recommended Shaft Diameter				Recommended Housing Bore				Boss Dia. Min.	Clamping Force Max. [lbf]
			Loose Fit ISO g6		Tight Fit ISO j6		Press Fit ISO N6		Loose Fit ISO H6			
			Max.	Min.	Max.	Min.	Min.	Max.	Min.	Max.		
.040	5,000	2,870	.2498	.2494	.2503	.2499	.7491	.7496	.7500	.7505	.516	870
.057	5,000	4,070	.3123	.3119	.3128	.3124	.8116	.8121	.8125	.8130	.578	1,400
.075	5,000	6,330	.3748	.3744	.3753	.3749	.8741	.8746	.8750	.8755	.641	2,100
.097	5,000	8,000	.4373	.4368	.4378	.4374	.9366	.9371	.9375	.9380	.703	2,850
.165	5,000	11,600	.4998	.4993	.5003	.4999	1.1241	1.1246	1.1250	1.1255	.844	3,840
.207	5,000	15,000	.5623	.5618	.5628	.5624	1.1864	1.1870	1.1875	1.1881	.891	4,870
.252	4,700	18,900	.6248	.6243	.6253	.6249	1.2489	1.2495	1.2500	1.2506	.953	6,150
.336	3,900	23,900	.7497	.7492	.7504	.7498	1.3739	1.3745	1.3750	1.3756	1.078	8,950
.423	3,400	30,500	.8747	.8742	.8754	.8748	1.6239	1.6245	1.6250	1.6256	1.250	12,200
.510	3,000	33,900	.9997	.9992	1.0004	.9998	1.7489	1.7495	1.7500	1.7506	1.375	16,300
.600	2,400	37,900	1.2496	1.2490	1.2504	1.2498	1.9987	1.9994	2.0000	2.0007	1.625	25,800
.710	2,000	44,200	1.4996	1.4990	1.5004	1.4998	2.2487	2.2494	2.2500	2.2507	1.875	25,800
.780	1,700	50,500	1.7496	1.7490	1.7504	1.7498	2.4987	2.4994	2.5000	2.5007	2.125	25,800
.880	1,500	56,800	1.9996	1.9989	2.0005	1.9997	2.7487	2.7494	2.7500	2.7507	2.375	25,800
.980	1,300	63,100	2.2496	2.2489	2.2505	2.2497	2.9987	2.9994	3.0000	3.0007	2.625	25,800
1.060	1,200	69,400	2.4996	2.4989	2.5005	2.4997	3.2485	3.2494	3.2500	3.2509	2.875	25,800
1.150	1,100	75,700	2.7496	2.7489	2.7505	2.7497	3.4985	3.4994	3.5000	3.5009	3.125	25,800
1.240	1,000	82,000	2.9996	2.9989	3.0005	2.9997	3.7485	3.7494	3.7500	3.7509	3.375	25,800
1.340	900	88,300	3.2495	3.2487	3.2505	3.2496	3.9985	3.9994	4.0000	4.0009	3.641	25,800
1.730	850	96,700	3.4995	3.4987	3.5005	3.4996	4.3735	4.3744	4.3750	4.3759	3.969	25,800
1.840	800	103,000	3.7495	3.7487	3.7505	3.7496	4.6235	4.6244	4.6250	4.6259	4.219	25,800
1.990	750	109,000	3.9995	3.9987	4.0005	3.9996	4.8732	4.8742	4.8750	4.8760	4.469	25,800

Airframe Needle Roller Bearings

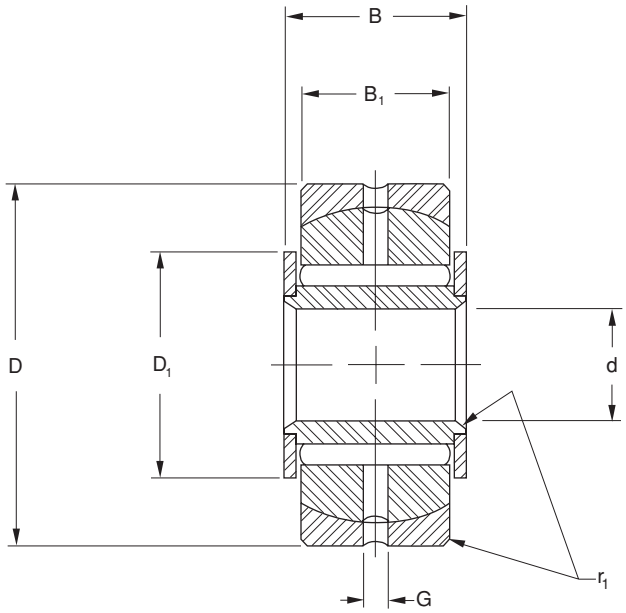

Series NBE

PART NUMBER	d Inside Diameter			D Outside Dia.		Width		r_1 Shaft & Housing Fillet Max.	D_1 End Plate Dia.	P Inner Ring Groove Width	G Outer Ring Groove Width	Approx. Weight [lbs]	
	Nom.	Max.	Min.	Max.	Min.	B Overall	B_1 Outer Ring						
4 NBE 615 ZP	1/4	.2500	.2493	.9375	.9370	.375	.281	.022	.688	-	.094	.053	
5 NBE 717 ZP	5/16	.3125	.3118	1.0625	1.0620	.437	.344	.022	.750	-	.094	.079	
6 NBK 919 YZP	3/8	.3750	.3743	1.1875	1.1870	.562	.469	.022	.812	.188	.125	.130	
7 NBK 1021 YZP	7/16	.4375	.4368	1.3125	1.3120	.625	.531	.032	.875	.188	.125	.174	
8 NBK 1224 YZP	1/2	.5000	.4993	1.5000	1.4995	.750	.656	.032	1.031	.188	.125	.293	
9 NBK 1427 YZP	9/16	.5625	.5618	1.6875	1.6870	.875	.781	.032	1.094	.188	.156	.420	
10 NBK 1628 YZP	5/8	.6250	.6243	1.7500	1.7495	1.000	.906	.032	1.156	.250	.156	.520	
12 NBK 1830 YZP	3/4	.7500	.7493	1.8750	1.8745	1.125	1.000	.032	1.281	.250	.156	.630	
14 NBK 2034 YZP	7/8	.8750	.8743	2.1250	2.1244	1.250	1.125	.032	1.500	.375	.156	.870	
16 NBK 2036 YZP	1	1.0000	.9993	2.2500	2.2494	1.250	1.125	.032	1.625	.375	.156	.960	
20 NBK 2040 YZP	1 1/4	1.2500	1.2493	2.5000	2.4994	1.250	1.049	.032	1.906	.375	.156	1.070	
24 NBK 2044 YZP	1 1/2	1.5000	1.4993	2.7500	2.7494	1.250	1.049	.032	2.156	.375	.156	1.230	
32 NBK 2052 YZP	2	2.0000	1.9993	3.2500	3.2492	1.250	1.049	.032	2.656	.375	.156	1.490	
40 NBK 2060 YZP	2 1/2	2.5000	2.4993	3.7500	3.7492	1.250	1.049	.032	3.156	.375	.156	1.780	
48 NBK 2068 YZP	3	3.0000	2.9993	4.2500	4.2492	1.250	1.049	.032	3.656	.375	.156	2.060	
56 NBK 2078 YZP	3 1/2	3.5000	3.4992	4.8750	4.8740	1.250	1.049	.044	4.219	.375	.156	2.650	

All dimensions are in inches

All exposed surfaces plated for corrosion resistance.

Airframe Needle Roller Bearings

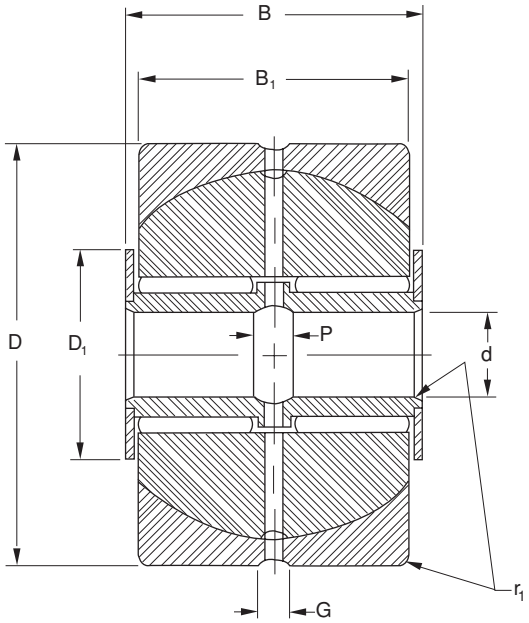

Series NBK

Speed Limit [rpm]	Load Limit [lbf]	Recommended Shaft Diameter				Recommended Housing Bore				Boss Diameter		Clamping Force Max. [lbf]
		Loose Fit ISO f6		Tight Transition Fit ISO j6		Press Fit ISO N6		Loose Fit ISO H6				
		Max.	Min.	Max.	Min.	Min.	Max.	Min.	Max.	Max.	Min.	
5,000	2,870	.2495	.2491	.2503	.2499	.9366	.9371	.9375	.9380	.688	.516	870
5,000	4,070	.3120	.3116	.3128	.3124	1.0616	1.0621	1.0625	1.0630	.734	.578	1,400
5,000	4,530	.3745	.3741	.3753	.3749	1.1864	1.1870	1.1875	1.1881	.781	.641	2,100
5,000	5,870	.4369	.4364	.4378	.4374	1.3114	1.3120	1.3125	1.3131	.844	.703	2,850
5,000	8,670	.4994	.4989	.5003	.4999	1.4989	1.4995	1.5000	1.5006	1.000	.844	3,840
5,000	11,800	.5619	.5614	.5628	.5624	1.6864	1.6870	1.6875	1.6881	1.062	.891	4,870
4,700	15,500	.6244	.6239	.6253	.6249	1.7489	1.7495	1.7500	1.7506	1.094	.953	6,150
4,000	20,000	.7492	.7487	.7504	.7498	1.8739	1.8745	1.8750	1.8756	1.156	1.078	8,950
3,400	25,800	.8742	.8737	.8754	.8748	2.1237	2.1244	2.1250	2.1257	1.375	1.250	12,200
3,000	28,700	.9992	.9987	1.0004	.9998	2.2487	2.2494	2.2500	2.2507	1.500	1.375	16,300
2,400	31,400	1.2490	1.2484	1.2504	1.2498	2.4987	2.4994	2.5000	2.5007	1.781	1.625	25,800
2,000	36,600	1.4990	1.4984	1.5004	1.4998	2.7487	2.7494	2.7500	2.7507	2.062	1.875	25,800
1,500	47,100	1.9988	1.9981	2.0005	1.9997	3.2485	3.2494	3.2500	3.2509	2.594	2.375	25,800
1,200	57,500	2.4988	2.4981	2.5005	2.4997	3.7485	3.7494	3.7500	3.7509	3.062	2.875	25,800
1,000	67,900	2.9988	2.9981	3.0005	2.9997	4.2485	4.2494	4.2500	4.2509	3.562	3.375	25,800
850	80,100	3.4986	3.4977	3.5005	3.4996	4.8732	4.8742	4.8750	4.8760	4.141	3.969	25,800

Airframe Track Rollers

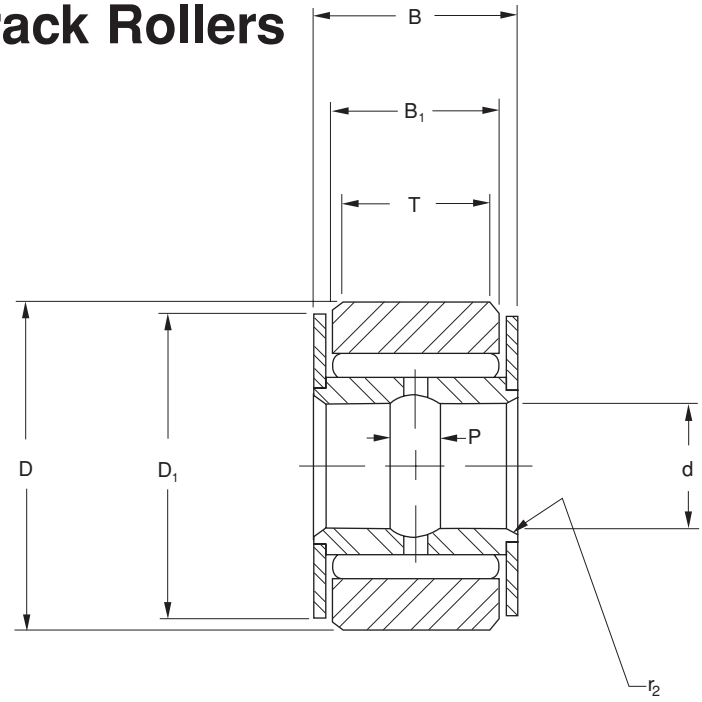

Series NBF

PART NUMBER	d Inside Diameter			D Outside Diameter		Width		r_2 Shaft Fillet Max.	D_1 End Plate Dia.	P Inner Ring Groove Width
	Nom.	Max.	Min.	Max.	Min.	B Overall	B_1 Outer Ring			
4 NBF 614 YJ	1/4	.2500	.2493	.8750	.8740	.375	.281	.022	.750	.125
6 NBF 817 YJ	3/8	.3750	.3743	1.0625	1.0615	.500	.375	.022	.938	.188
8 NBF 1021 YJ	1/2	.5000	.4993	1.3125	1.3115	.625	.500	.032	1.188	.188
10 NBF 1224 YJ	5/8	.6250	.6243	1.5000	1.4990	.750	.625	.032	1.375	.250
12 NBF 1628 YJ	3/4	.7500	.7493	1.7500	1.7490	1.000	.875	.032	1.625	.250
14 NBF 1832 YJ	7/8	.8750	.8743	2.0000	1.9999	1.125	1.000	.032	1.875	.250
20 NBF 2040 YJ	1 1/4	1.2500	1.2493	2.5000	2.4990	1.250	1.049	.032	2.375	.375
24 NBF 2448 YJ	1 1/2	1.5000	1.4993	3.0000	2.9990	1.500	1.299	.032	2.875	.375
28 NBF 2455 YJ	1 3/4	1.7500	1.7493	3.4375	3.4365	1.500	1.299	.032	3.312	.375
32 NBF 2462 YJ	2	2.0000	1.9993	3.8750	3.8740	1.500	1.299	.032	3.750	.375
36 NBF 2469 YJ	2 1/4	2.2500	2.2493	4.3125	4.3115	1.500	1.299	.032	4.188	.375
40 NBF 2476 YJ	2 1/2	2.5000	2.4993	4.7500	4.7490	1.500	1.299	.032	4.625	.375
44 NBF 2480 YJ	2 3/4	2.7500	2.7493	5.0000	4.9990	1.500	1.299	.032	4.875	.375
6 NBL 1618 YJ	3/8	.3750	.3743	1.1250	1.1240	1.000	.875	.022	1.000	.188
8 NBL 2022 YJ	1/2	.5000	.4993	1.3750	1.3740	1.250	1.125	.032	1.250	.250
10 NBL 2426 YJ	5/8	.6250	.6243	1.6250	1.6240	1.500	1.375	.032	1.500	.375
12 NBL 2830 YJ	3/4	.7500	.7493	1.8750	1.8740	1.750	1.625	.032	1.750	.375
14 NBL 3234 YJ	7/8	.8750	.8743	2.1250	2.1240	2.000	1.875	.032	2.000	.375
16 NBL 3638 YJ	1	1.0000	.9993	2.3750	2.3740	2.250	2.049	.032	2.125	.375
20 NBL 4044 YJ	1 1/4	1.2500	1.2493	2.7500	2.7490	2.500	2.299	.032	2.500	.375
24 NBL 4448 YJ	1 1/2	1.5000	1.4993	3.0000	2.9990	2.750	2.549	.032	2.750	.375
28 NBL 4855 YJ	1 3/4	1.7500	1.7493	3.4375	3.4365	3.000	2.799	.032	3.188	.375
32 NBL 4862 YJ	2	2.0000	1.9993	3.8750	3.8740	3.000	2.799	.032	3.625	.375

Airframe Track Rollers

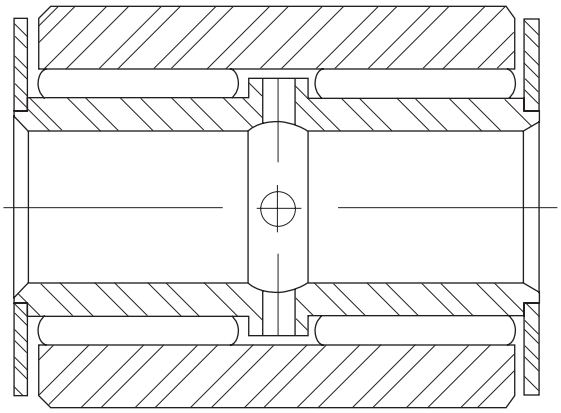

Series NBL

T Effective Track Width	Approx. Weight [lbs]	Speed Limit [rpm]	Load Limit [lbf]	Capacity as a Track Roller [lbf]	Track Capacity @ 40 Rc [lbf]	Recommended Shaft Diameter				Boss Dia. Min.	Clamping Force Max. [lbf]
						Loose Transition Fit ISO g6		Tight Transition Fit ISO j6			
						Max.	Min.	Max.	Min.		
.218	.049	5,000	1,910	1,430	590	.2498	.2494	.2503	.2499	.516	800
.312	.098	5,000	3,600	2,700	1,000	.3748	.3744	.3753	.3749	.672	2,000
.438	.178	5,000	5,780	4,300	1,800	.4998	.4993	.5003	.4999	.844	3,500
.562	.266	4,600	8,530	6,400	2,600	.6248	.6243	.6253	.6249	.953	6,000
.750	.495	3,800	14,200	10,700	4,100	.7497	.7492	.7504	.7498	1.109	9,000
.875	.713	3,300	19,300	14,400	5,400	.8747	.8742	.8754	.8748	1.219	12,000
.938	1.100	2,300	25,300	18,900	7,300	1.2496	1.2490	1.2504	1.2498	1.625	25,000
1.172	2.250	1,900	37,900	28,400	10,900	1.4996	1.4990	1.5004	1.4998	1.984	25,000
1.172	3.160	1,650	44,100	33,000	12,500	1.7496	1.7490	1.7504	1.7498	2.281	25,000
1.172	3.820	1,450	48,900	36,700	14,000	1.9996	1.9989	2.0005	1.9997	2.562	25,000
1.172	4.810	1,300	55,000	41,200	15,600	2.2496	2.2489	2.2505	2.2497	2.859	25,000
1.172	5.940	1,200	59,900	44,900	17,200	2.4996	2.4989	2.5005	2.4997	3.109	25,000
1.172	7.200	1,100	64,800	48,600	18,100	2.7496	2.7489	2.7505	2.7497	3.344	25,000
.750	.228	5,000	7,130	5,370	2,600	.3748	.3744	.3753	.3749	.672	2,000
1.000	.416	5,000	12,500	9,370	4,300	.4998	.4993	.5003	.4999	.891	3,500
1.125	.693	4,600	19,900	15,000	5,600	.6248	.6243	.6253	.6249	1.109	6,000
1.375	1.080	3,800	28,500	21,400	8,000	.7497	.7492	.7504	.7498	1.281	9,000
1.625	1.550	3,300	38,500	28,900	10,700	.8747	.8742	.8754	.8748	1.469	12,000
1.797	2.200	2,900	44,900	33,600	13,200	.9997	.9992	1.0004	.9998	1.578	15,000
2.047	3.100	2,300	59,500	44,600	17,400	1.2496	1.2490	1.2504	1.2498	1.844	25,000
2.297	4.120	1,900	71,300	53,600	21,300	1.4996	1.4990	1.5004	1.4998	1.984	25,000
2.547	5.800	1,650	92,000	69,000	27,000	1.7496	1.7490	1.7504	1.7498	2.281	25,000
2.547	7.000	1,450	102,000	76,600	30,500	1.9996	1.9989	2.0005	1.9997	2.562	25,000

Cam Followers, Yoke, and Track Rollers

Introduction to Cam Follower Technology

Safety Precaution

In rare cases a bearing failure may cause great mechanical damage or even lead to personal injury. To help prevent such losses, you may contact RBC's engineering staff to review your application details. The engineering staff's review will assist you in identifying potential problem areas and suggest modifications to improve bearing performance in your application. The engineering staff at RBC has many years of experience with a large variety of applications and operating conditions. If you have a safety related application and would like an evaluation by RBC's engineering department, please submit your application details in confidence.

1. Difference from Standard Bearings

The outer rings of regular ball and roller bearings are typically mounted in rigid housings providing support around the entire circumference. Individual roller forces are transmitted through the outer ring directly into the housing with no major deformations.

By contrast, cam followers and yoke rollers are supported at a single point on their circumference. Individual roller forces produce bending moments on the outer ring around the point of contact. The effects are outer ring deformation with reversed bending stresses in dynamic applications, a reduced load zone, and a higher maximum roller load (see Fig. 1.).

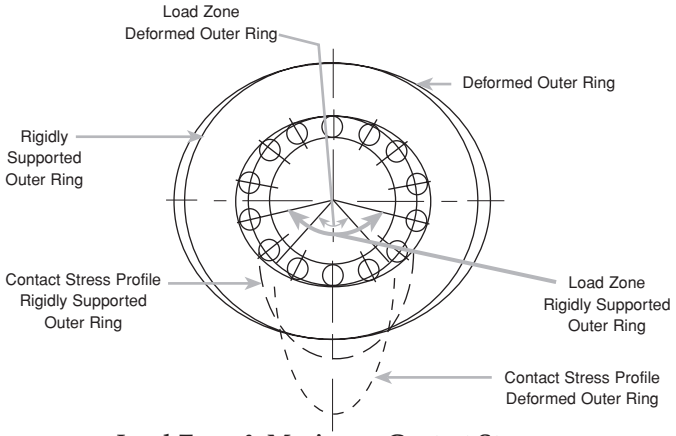

Load Zone & Maximum Contact Stress

Fig. 1

To keep deformation to a minimum, the outer ring of a cam follower must have a considerably heavier cross section than a standard bearing. This requirement conflicts with the desire for maximum dynamic bearing capacity which needs as large a roller diameter as possible. RBC cam followers and yoke rollers provide an optimum compromise between outer ring strength and theoretical bearing capacity.

2. Capacity and Load Limits

Evaluation of the expected service life and limit loads of cam followers is more complex than with housed bearings. In addition to the static and dynamic capacity of the rolling elements, outer ring deformation, track capacity, and cam follower stud bending stress must be considered. In yoke rollers, the pin shear stress must be considered.

RBC lists the static bearing capacity for reference purposes only. Typically, the maximum allowable load is a function of the maximum permissible bending stress of the stud or the outer ring. For best results, the operating loads should not exceed the lower of track capacity or 50% of the dynamic capacity.

2.1 Capacity of Rolling Element Bearing

Equations for static and dynamic capacities of roller bearings are given in ANSI/ABMA Standard 11. The more recent revisions leave it up to the manufacturer to introduce factors which account for internal design features and operating conditions. For cam followers and yoke rollers RBC has chosen to apply a conservative rating system, so a direct comparison with capacity figures of competitive products may not be possible.

2.2 Track Capacity

Track capacity is that load which a track subject to a uniform contact stress can withstand without excessive plastic deformation. It is directly related to track hardness. The published track capacity is based on a hardness of HRc 40. For other track hardness values the track capacity must be modified with factors from Table 1.

Track Hardness [HRc]	Material Strength [psi]	Modification Factor
26	128,000	.45
32	146,000	.61
36	165,000	.79
40	182,000	1.00
44	204,000	1.24
47	229,000	1.50
50	247,000	1.78
53	266,000	2.09
56	281,000	2.42
58	298,000	2.78

Table 1. Track Capacity Adjustment Factors.

Alternatively, contact stress can be easily calculated and compared directly to the strength of material. The equation for the Hertz contact stress between a cylindrical cam follower outer ring and a flat steel track is given by "Roark, Formulas for Stress and Strain" as:

$$\sigma_{C\,max} = 3{,}237 * \sqrt{\frac{F}{l_{eff} * D}} \quad [psi] \qquad (1)$$

where

F = radial load [lbf]
l_{eff} = length of outer ring contact [in]
D = outer ring diameter [in]

It can be shown that for infinite life the ultimate tensile strength of track and roller must be at least equal to the maximum contact stress $\sigma_{C\,max}$

Example 1:

Determine the required minimum track hardness for an RBC cam follower S 56 L operating under a 3000 lbf radial load.

Solution:

$$\sigma_{C\,max} = 3{,}237 * \sqrt{\frac{3{,}000\ lbf}{0.8\ in * 1.75\ in}} = 149{,}800\ psi$$

Referring to *Table 1*, 149,800 psi is between 146,000 psi (HRc32) and 165,000 (HRc 36). Interpolation yields a minimum track hardness of HRc 33.

2.3. Bending and Shear Stresses

2.3.1 Cam Follower Stud Bending Stress

If the load over the width of the outer ring is evenly distributed, it may be replaced by a single concentrated force F [lbf] acting at the center of the cam follower (see Fig.2). Assuming that the cam follower stud has been tightly mounted in a housing bore flush with the end plate, this concentrated force generates a bending moment M_b.

$$M_b = F * \left(\frac{B}{2} + \frac{1}{32}\right) \quad [in * lbf] \qquad (2)$$

where B = outer ring width [in]
1/32 = cam follower overhang [in]

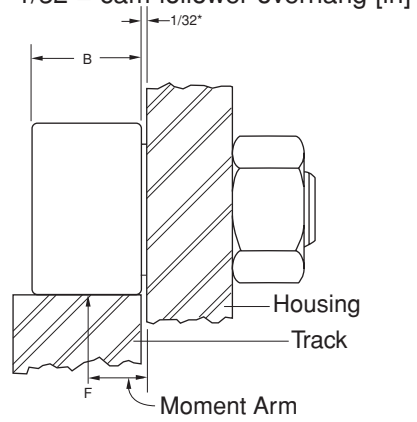

Theoretical Moment Arm without stud deflection

*sizes 160 and above = 1/16

Fig. 2

The bending moment generates a bending stress in the cam follower stud of approximate magnitude

$$\sigma_b = 10 * \frac{M_b}{SD^3} \quad [psi] \qquad (3)$$

where SD=Stud Diameter [in]

Standard cam follower studs are heat treated to a hardness of HRc 58 min in the raceway area only.

The hardness in other areas of the stud is typically in a range of HRc 20 -22 with an ultimate strength of material of 110,000 -120,000 psi. RBC bases the maximum allowable load of stud type cam followers on a theoretical stud bending stress of 100,000 psi. Standard stud cam followers and heavy stud cam followers differ in stud diameter, which permits higher operating loads and more resistance to impact loading for the heavy stud version. High stud strength cam followers are available by special order.

In most applications the stud will deflect away from the load, which causes the point of attack to shift toward the support, shortening the moment arm and reducing the effective bending moment (see Fig. 3). Tests show that this deflection yields a safety factor of at least 2 over RBC's maximum allowable load. However, this effect may not be sufficient to avoid damage in severely misaligned applications where the load is applied at the very extreme outboard edge of the cam follower outer ring.

Where misalignment is a problem, RBC recommends crowned cam followers.

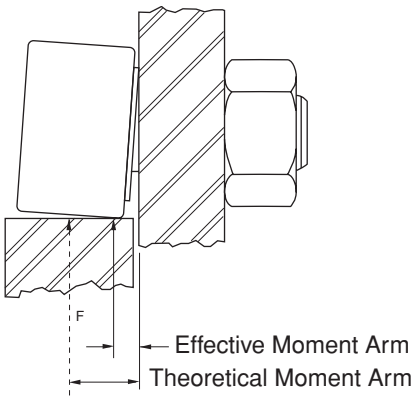

Effective Moment Arm with stud deflection

Fig. 3

Example 2
Cam follower S 64 L supports a load of 6,000 lbf. The stud diameter is .875", the outer ring width 1.25". Determine the theoretical bending stress at the stud housing interface.

Solution:

$$M_b = 6{,}000 \text{ lbf} * \left(\frac{1.25 \text{ in}}{2} + \frac{1}{32} \text{ in} \right) = 3{,}938 \text{ in} * \text{lbf}$$

$$\sigma_b = 10 * \frac{3{,}938 \text{ in} * \text{lbf}}{(.875 \text{ in})^3} = 58{,}776 \text{ psi}$$

2.3.2 Yoke Roller Pin Shear Stress

Yoke rollers are mounted with a pin in a yoke. Under load the pin is subject to shear and bending stresses. RBC recommends that the yoke arms are located as close to the yoke roller as possible, so that bending stress can be ignored. In case of widely spaced pin supports, the resulting pin deflection may cause yoke roller damage.

The pin shear stress can be calculated with

$$\sigma_s = 2 * \frac{F}{\pi * d^2} \quad \text{[psi]} \qquad (4)$$

where d=pin diameter

The permissible stress depends on the pin material selection.

Example 3
Determine the shear stress of the .375 in. diameter pin for yoke roller Y 40 L, loaded radially with 3,200 lbf.

Solution:

$$\sigma_s = 2 * \frac{3{,}200 \text{ lbf}}{\pi * (.375 \text{ in})^2} = 14{,}487 \text{ psi}$$

2.4 Outer Ring Stress and Deformation

The exact calculation of these values is beyond the scope of this introduction. The following method may be used for a (high) first estimate of the outer ring tensile stress at the inside diameter opposite the contact point of a single row cam or roller follower. The assumption is that the entire load is supported by only 2 rollers straddling the point of contact:

$$\sigma_{b\,max} = \frac{6 * F * D_i * \pi}{z * b * (D - D_i)^2} \quad \text{[psi]} \qquad (5)$$

where F = cam follower load [lbf]
D_i = outer ring raceway diameter [in]
D = outer ring outside diameter [in]
z = number of rollers per row
b = idealized outer ring width [in]

Example 4
Estimate the outer ring tensile stress of yoke roller Y 56 L subject to a load of 6,000 lbf. The yoke roller has 25 rollers, the outer ring outside diameter = 1.750 in., the outer ring raceway diameter =1.125 in., the idealized outer ring width = .690 in.

Solution:

$$\sigma_{b\,max} = \frac{6 * 6{,}000\ \text{lbf} * 1.125 * \pi}{25 * .690\ \text{in} * (1.75\ \text{in} - 1.125\ \text{in})^2} = 18{,}880\ \text{psi}$$

3. Fatigue Life

Fatigue life, L_{10} [rev, hrs], is a statistical measure of the life which 90% of a large group of apparently identical rolling element bearings will complete or exceed. For a single bearing, L_{10} also refers to the life associated with 90% reliability.

The relationship between fatigue or rating life, capacity and load is:

$$L_{10\,rev} = \left(\frac{C}{P_e}\right)^{\frac{10}{3}} \qquad (6)$$

where $L_{10\,rev}$ = Rating life [10^6 rev]
C = Dynamic capacity [lbf]
P_e = Equivalent radial load

To obtain the rating life in hours, use

$$L_{10\,hrs} = \frac{16{,}667}{n_e} * \left(\frac{C}{P_e}\right)^{\frac{10}{3}} \qquad (7)$$

where $L_{10\,hrs}$ = Rating life [hours]
n_e = equivalent speed [rpm]

In case of constant speed, the equivalent speed equals the constant bearing speed. In all other cases the equivalent speed is the weighted average of all individual speed components.

$$n_e = \sum\left(\frac{n_i * t_i}{100}\right) = \frac{n_1 * t_1}{100} + \frac{n_2 * t_2}{100} + \ldots \qquad (8)$$

where n_i = individual speed component [rpm]
t_i = time interval in percent of total time

In case of constant load, the equivalent radial load equals the constant load. To compute the equivalent load for all other cases, use:

$$P_e = \sqrt[q]{\sum\left(\frac{F_i^q * n_i * t_i}{n_e * 100}\right)} = \sqrt[q]{\frac{F_1^q * n_1 * t_1}{n_e * 100} + \frac{F_2^q * n_2 * t_2}{n_e * 100} + \ldots} \qquad (9)$$

where q = 10/3 for roller bearings
F_t = individual radial load [lbf]

4. Speed Limit and Maximum Acceleration

4.1 Speed Limit

The limiting speed of rolling element bearings is primarily a function of size and internal design. The speed limits given in this catalog should not be exceeded on a continuous basis to prevent premature failure due to excessive temperature. Contact RBC for solutions to high speed applications.

4.2 Maximum Acceleration (Deceleration)

A sufficiently large tangential friction force F_t, acting between outside diameter and track is needed to change the rotational speed of cam follower and yoke roller outer rings.

$$F_t = F * \mu \ \text{[lbf]} \qquad (10)$$

where μ = coefficient of friction (outer ring to track)

The force F_t produces a moment M_t, which must accelerate the masses of outer ring and rollers around the bearing axis, plus the rollers in the load zone around their own axes.

The moment M_t can be calculated using:

$$M_t = \frac{D * F_t}{2} \quad [in * lbf] \qquad (11)$$

Accelerating the mass of the outer ring normally requires the largest part of moment M_t. Assuming a coefficient of friction of $\mu = 0.10$ and a typical cam follower design, the following equation may be used for an estimate of the permissible angular acceleration α:

$$\alpha_{perm} = \frac{6000 * M_t}{B * D^4} \quad [rad/sec^2] \qquad (12)$$

Excessive acceleration causes sliding of the outer ring on the track. The effects range from minor uniform wear on cam follower and track to flat spots on the cam follower with subsequent failure.

5. Mounting

5.1 Cam Followers

For greatest rigidity and strength, the end plate should be drawn up snugly against a boss or other flat surface of the housing. The tables on pages 8 throughout 23 list the maximum recommended clamping torque for lubricated threads, which is the normal condition. Use up to twice the listed torque for completely dry threads.

The housing bore should be drilled and reamed to the recommended tolerance. If a greater tolerance is needed, it should be added to the plus side to prevent cam follower damage during assembly. If the cam follower stud fits tightly into the housing bore, use an arbor press and apply pressure against the central portion of the flange. Never press against the rim of the flange or the outer ring.

Although wide blade screwdrivers may be used to hold slotted head cam followers during assembly, rounded tools conforming to the slot are preferable to avoid plastic deformation in the slot area.

RBC offers a convenient socket (W suffix) for hex wrenches to provide a more substantial grip, especially for 'blind hole' applications.

5.2 Eccentric Cam Followers

Eccentric cam followers are used when there is a need to make height adjustments between the cam follower and the track. By simply turning the entire cam follower inside the housing it is possible to adjust the distance between the cam follower and the track by twice the eccentricity. However, due to the mechanical advantage that the eccentricity provides, it is inadvisable that the cam follower be adjusted over this entire range.

A very large force can be exerted on the track for a small applied adjusting torque as the eccentricity of the cam follower approaches ±90 degrees from a starting position parallel to the track, in the housing. Adjustments should be limited to ±45 degrees and the resulting preload should not exceed 10% of the cam follower's capacity.

The following equation can be used to find an appropriate adjusting torque.

$$T = 0.1 * C * e * \cos 45° \quad [in * lbf] \qquad (13)$$

where T = appropriate adjusting torque [lbf]
C = cam followers dynamic capacity [lbf]
e = eccentricity of cam follower [in]

Example 5
CamCentric cam follower S48LWX has a dynamic capacity of 4,600 lb, and an eccentricity of 0.03 in. Determine the appropriate adjusting torque.

Solution: (14)

$T = 4{,}600 \text{ lbf} * 0.03 \text{ in} * 0.070711 = 9.76 \text{ in} * \text{lbf}$

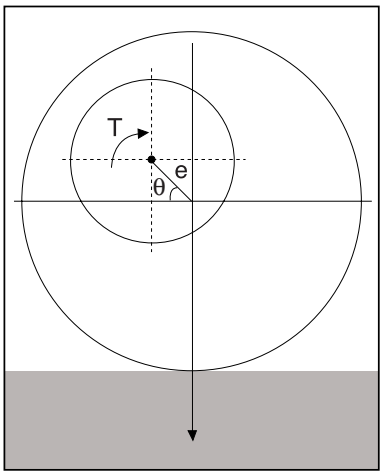

Fig. 4

5.3 Yoke Rollers

RBC yoke rollers correspond in many respects to the same size cam follower, except they are mounted on a pin for use in yoke type applications for greater shock resistance.

Yoke rollers should be clamped axially or mounted within closely fitting side rails to prevent displacement of the end plates. For applications with heavy loads, it is recommended to heat treat the pin and use a press fit for the inner ring. A soft pin and light press or push fit are sufficient for lightly loaded applications. When press fitting a yoke roller, pressure should be applied centrally and uniformly against the end plate, never against the outer ring.

The pin should have a suitable lead-in chamfer or radius to prevent scoring and to hold the mounting force to a minimum.

5.4 Caged Roller Followers

Caged roller followers can operate directly on a hardened and ground shaft (HRc 58 min, 16 rms min surface finish) or can be used with matching inner rings. Operating without an inner ring yields the largest possible shaft diameter with greatest strength and rigidity. Axial guidance must be provided by the application. It is recommended to use hardened steel or bronze thrust washers with radial lubricating grooves as needed.

6.1 Track Lubrication

In most applications it is difficult to eliminate *all* cam follower misalignment. Misalignment causes the outer ring to thrust, which in needle bearing cam followers, produces wear of the seal followed by wear of the outer ring face and the stud flange or the end plate. In RBC Rollers ® the wear is generallly limited to the center thrust ring. Misalignment where the axis of the cam follower is not perpendicular to the direction of rolling, typically produces the most severe thrust and also causes wear on the cam follower outside diameter, and the track. To reduce these symptoms as much as possible, the track must be lubricated. Lubrication also reduces wear stemming from excessive acceleration. Oil and grease are acceptable lubricants.

If the track cannot be lubricated, contact RBC Engineering for a review of the operating parameters to ensure that they do not exceed the limits of the bearing selected.

6.2 Bearing Lubrication

Cam followers and yoke rollers are pre-lubricated with an NLGI grade 2, lithium soap, mineral oil based grease with EP additives. RBC Roller® type cam followers and yoke rollers are normally lubricated for life and have no provisions for relubrication. Needle roller type cam followers require relubrication depending on operating speed, duty cycle, operating environment, desired service life, etc.

For relubrication in service, mineral oil, or any good roller bearing grease on mineral oil basis may be used. Inquire about compatibility of greases with different base oil and thickener.

Except for the very small sizes (see tables), cam followers with screwdriver slots can be relubricated from both ends of the stud and through the housing. *Table 2* lists suitable drive fit Alemite fittings. Plugs are furnished by RBC to close off unused passages.

Size	Bearing P/N	Fitting P/N
1/2" - 11/16"	-16 to -22	3019
3/4" - 2 3/4"	-24 to -88	1728-B, 1646-B, 1992-B
3" - 4"	-96 to -128	1743, 1743-B
5" - up	-160	any 1/4" NPT fitting

Table 2. Alemite fittings.

Cam followers of the HexLube® series are supplied with a grease fitting at the bottom of the hex hole. Yoke rollers and sealed roller followers must be relubricated through the shaft.

7. Misalignment

Initial misalignment should not exceed .001 in./in. Any misalignment generates thrust forces between outer ring and flange or end plate. Excessive thrusting can lead to increased operating temperature and destruction of the seal in standard cam followers and yoke rollers. Where misalignment and outer ring thrusting cannot be avoided, RBC recommends crowned outer rings or the RBC Roller® design which is more capable of withstanding thrust loads. Contact RBC engineers about thrust and load limits.

8. Operating Temperature

The temperature limits of all standard cam followers and yoke rollers in this catalog, except airframe bearings, are determined by the temperature limits of the seals and the lubricant. With lower temperatures, grease gradually becomes stiffer, increasing the rolling resistance of the cam follower. Any application with the cam follower operating continuously below 0° F (-18° C), consult with RBC Engineering for a specific low temperature grease. The maximum continuous operating temperature is +250° F (120° C), and for short periods, the maximum temperature may rise to +300° F (150° C). For continuous operation above +250° F (120° C), consult with RBC Engineering to determine the need for special high temperature grease and seal material.

RBC can provide special solutions for applications outside the normal operating temperature range.

TYPICAL APPLICATIONS

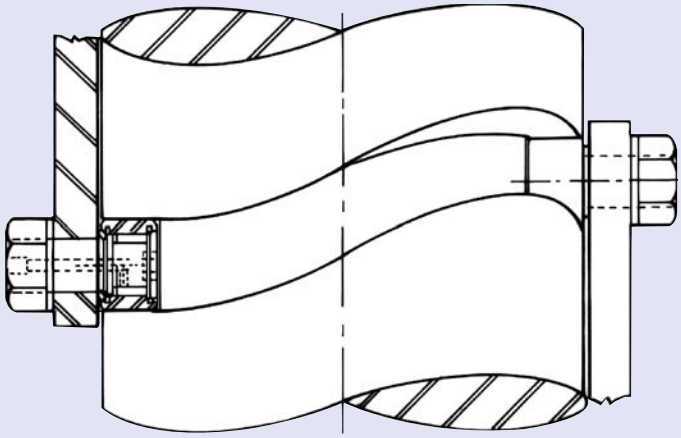

Drum Cam
A pair of heavy stud cam followers are shown mounted in linkages activated by a drum cam or grooved rotating shaft. A lubrication hole through the stud accepts a drive fitting for periodic relubrication.

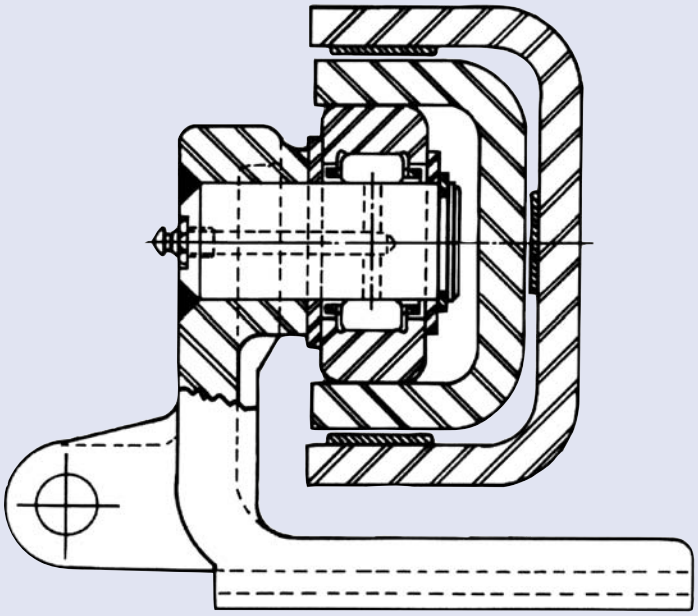

Material Handling Equipment
Carriage rollers and side rollers of lift trucks are typical applications where roller followers have performed exceedingly well. The heavy walled outer ring eliminates the need for a separate tire and bearing assembly.

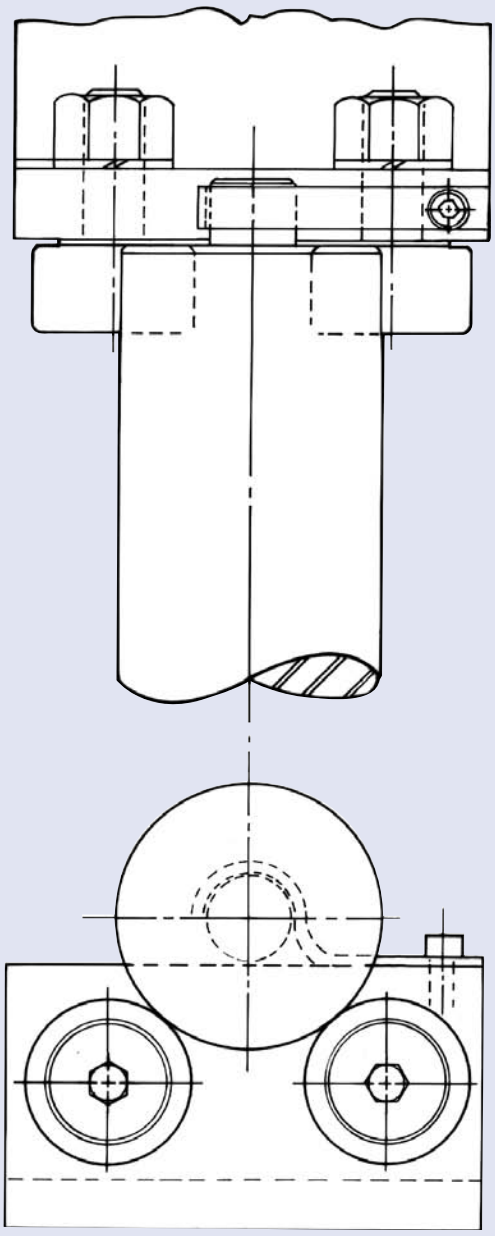

Rewind Stands
Rewind stands for packaging material or printed coils make use of cam followers. A simple two or three point support consists simply of several cam followers acting on the journal or body of the roll. The upper bracket is optional and a very quick changeover results in either case.

TYPICAL APPLICATIONS

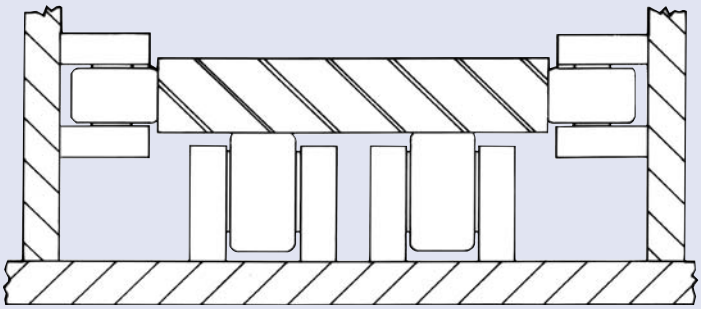

Table Supports
Yoke rollers may be effectively mounted to support tables, tracks or other machine members requiring linear motion. The illustration depicts horizontal location between yoke rollers, but this may be achieved by cam followers or Cam-Centric® followers as well.

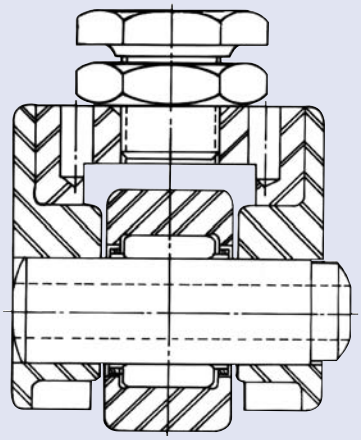

Internal Combustion Engines
RBC's yoke roller followers have found wide acceptance as valve tappet and fuel injection rollers. The outer ring flanges support the cage against high inertia loads assuring positive, individual roller control by the cage.

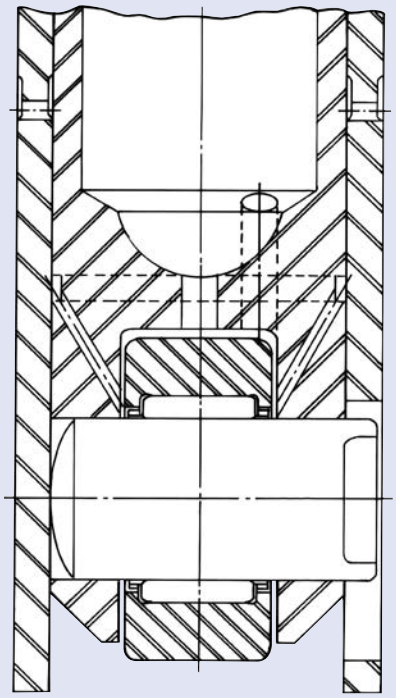

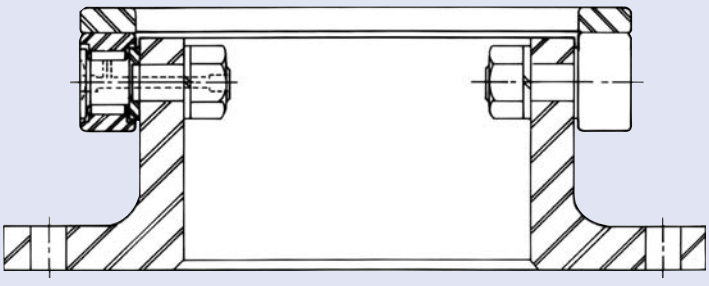

Turntable Mounting
Cam followers can be mounted in a circular housing to support a ring or thrust plate. Precise leveling adjustment for the turntable can be obtained using the adjustable CamCentric® cam follower.

TYPICAL APPLICATIONS

Cluster Mounting
Cluster mounting of four cam followers around a square column demonstrates the unique versatility of these bearings. Threads are concentric with the shank within very close limits. This feature is important on "blind hole" mountings where run-out would result in binding.

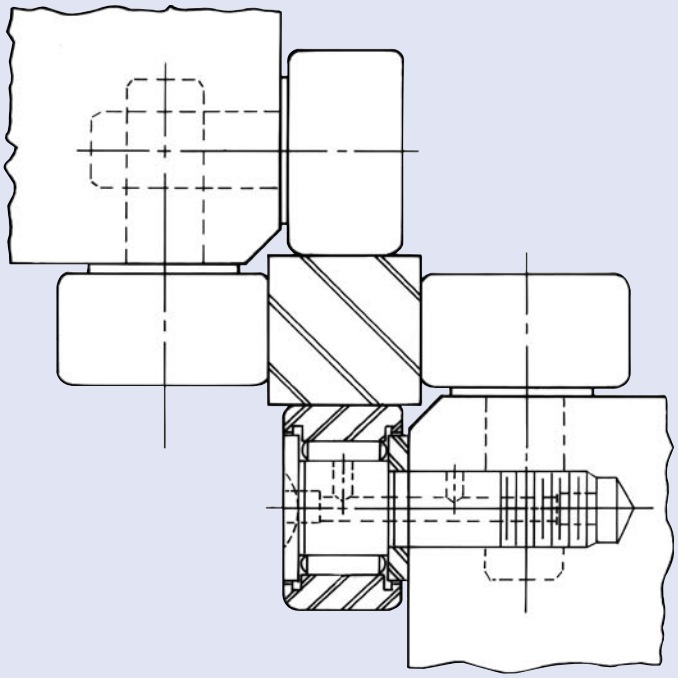

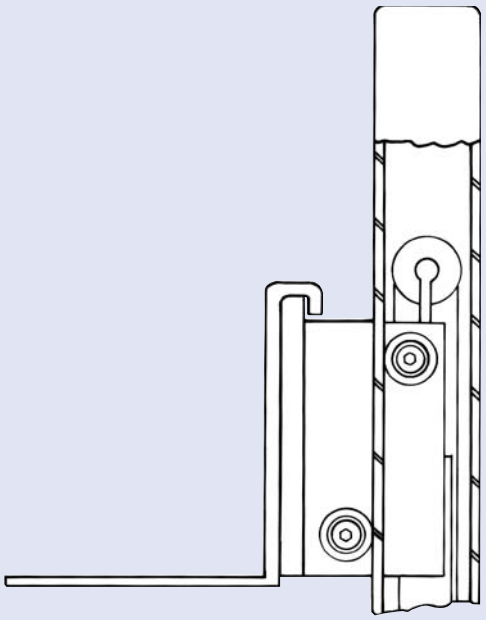

Manual Lift Truck
Schematic arrangement of cam followers is shown on the upright of a warehouse hand truck. CamCentric® bearings are frequently used to provide adjustment so that all bearings contact the track without critical hole positioning.

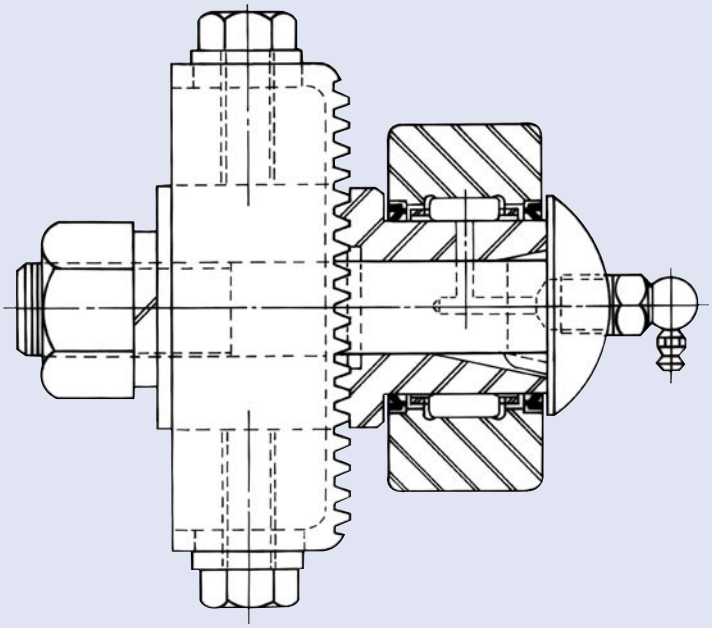

Textile Machinery
The sealed yoke rollers work extremely well as picking rolls of looms due to the fact that the minimum friction assures constant turning to eliminate wear.

UNIVERSAL SERIES™ INTERCHANGE TABLES

STANDARD STUD
With Hex Socket Head — Sealed

RBC UNIVERSAL HexLube® Series	REPLACES Direct Interchange		REPLACES					
RBC Part No.	McGill	Torrington	RBC		McGill		Torrington	
S16LW*	CF-1/2-SB	CRSB-8-1	S16	S16L	CF-1/2	CF-1/2-S	CR-8-1	CRS-8-1
S18LW*	CF-9/16-SB	—	S18	S18L	CF-9/16	CF-9/16-S	N/A	N/A
S20LW*	CF-5/8-SB	CRSB-10-1	S20	S20L	CF-5/8	CF-5/8-S	CR-10-1	CRS-10-1
S22LW*	CF-11/16-SB	—	S22	S22L	CF-1 1/16	CF-1 1/16-S	N/A	N/A
S24LW	CF-3/4-SB	CRSB-12	S24	S24L	CF-3/4	CF-3/4-S	CR-12	CRS-12
S28LW	CF-7/8-SB	CRSB-14	S28	S28L	CF-7/8	CF-7/8-S	CR-14	CRS-14
S32LW	CF-1-SB	CRSB-16	S32	S32L	CF-1	CF-1-S	CR-16	CRS-16
S36LW	CF-1 1/8-SB	CRSB-18	S36	S36L	CF-1 1/8	CF-1 1/8-S	CR-18	CRS-18
S40LW	CF-1 1/4-SB	CRSB-20	S40	S40L	CF-1 1/4	CF-1 1/4-S	CR-20	CRS-20
S44LW	CF-1 3/8-SB	CRSB-22	S44	S44L	CF-1 3/8	CF-1 3/8-S	CR-22	CRS-22
S48LW	CF-1 1/2-SB	CRSB-24	S48	S48L	CF-1 1/2	CF-1 1/2-S	CR-24	CRS-24
S52LW	CF-1 5/8-SB	CRSB-26	S52	S52L	CF-1 5/8	CF-1 5/8-S	CR-26	CRS-26
S56LW	CF-1 3/4-SB	CRSB-28	S56	S56L	CF-1 3/4	CF-1 3/4-S	CR-28	CRS-28
S60LW	CF-1 7/8-SB	CRSB-30	S60	S60L	CF-1 7/8	CF-1 7/8-S	CR-30	CRS-30
S64LW	CF-2 -SB	CRSB-32	S64	S64L	CF-2	CF-2-S	CR-32	CRS-32
S72LW	CF-2 1/4-SB	CRSB-36	S72	S72L	CF-2 1/4	CF-2 1/4-S	CR-36	CRS-36
S80LW	CF-2 1/2-SB	CRSB-40	S80	S80L	CF-2 1/2	CF-2 1/2-S	CR-40	CRS-40
S88LW	CF-2 3/4-SB	CRSB-44	S88	S88L	CF-2 3/4	CF-2 3/4-S	CR-44	CRS-44
S96LW	CF-3 -SB	CRSB-48	S96	S96L	CF-3	CF-3-S	CR-48	CRS-48
S104LW	CF-3 1/4-SB	CRSB-52	S104	S104L	CF-3 1/4	CF-3 1/4-S	CR-52	CRS-52
S112LW	CF-3 1/2-SB	CRSB-56	S112	S112L	CF-3 1/2	CF-3 1/2-S	CR-56	CRS-56
S128LW	CF-4 -SB	CRSB-64	S128	S128L	CF-4	CF-4-S	CR-64	CRS-64
S160LW	CF-5 -SB	CRSB-80	S160	S160L	CF-5	CF-5-S	CR-80	CRS-80
S192LW	CF-6 -SB	CRSB-96	S192	S192L	CF-6	CF-6-S	CR-96	CRS-96

*Cannot be lubricated through hexhead

UNIVERSAL SERIES™ INTERCHANGE TABLES

STANDARD STUD
With Crowned Outer — Sealed—Hex Head

RBC UNIVERSAL HexLube® Series	REPLACES Direct Interchange		REPLACES		
RBC Part No.	McGill	Torrington	RBC	McGill	Torrington
CS16LW*	CCF-1/2-SB	CRSBC-8-1	CS16L	CCF-1/2-S	CRSC-8-1
CS18LW*	CCF-9/16-SB	—	CS18L	CCF-9/16-S	N/A
CS20LW*	CCF-5/8-SB	CRSBC-10-1	CS20L	CCF-5/8-S	CRSC-10-1
CS22LW*	CCF-11/16-SB	—	CS22L	CCF-11/16-S	N/A
CS24LW	CCF-3/4-SB	CRSBC-12	CS24L	CCF-3/4-S	CRSC-12
CS28LW	CCF-7/8-SB	CRSBC-14	CS28L	CCF-7/8-S	CRSC-14
CS32LW	CCF-1-SB	CRSBC-16	CS32L	CCF-1-S	CRSC-16
CS36LW	CCF-1 1/8-SB	CRSBC-18	CS36L	CCF-1 1/8-S	CRSC-18
CS40LW	CCF-1 1/4-SB	CRSBC-20	CS40L	CCF-1 1/4-S	CRSC-20
CS44LW	CCF-1 3/8-SB	CRSBC-22	CS44L	CCF-1 3/8-S	CRSC-22
CS48LW	CCF-1 1/2-SB	CRSBC-24	CS48L	CCF-1 1/2-S	CRSC-24
CS52LW	CCF-1 5/8-SB	CRSBC-26	CS52L	CCF-1 5/8-S	CRSC-26
CS56LW	CCF-1 3/4-SB	CRSBC-28	CS56L	CCF-1 3/4-S	CRSC-28
CS60LW	CCF-1 7/8-SB	CRSBC-30	CS60L	CCF-1 7/8-S	CRSC-30
CS64LW	CCF-2-SB	CRSBC-32	CS64L	CCF-2-S	CRSC-32
CS72LW	CCF-2 1/4-SB	CRSBC-36	CS72L	CCF-2 1/4-S	CRSC-36
CS80LW	CCF-2 1/2-SB	CRSBC-40	CS80L	CCF-2 1/2-S	CRSC-40
CS88LW	CCF-2 3/4-SB	CRSBC-44	CS88L	CCF-2 3/4-S	CRSC-44
CS96LW	CCF-3-SB	CRSBC-48	CS96L	CCF-3S	CRSC-48
CS104LW	CCF-3 1/4-SB	CRSBC-52	CS104L	CCF3 1/4-S	CRSC-52
CS112LW	CCF-3 1/2-SB	CRSBC-56	CS112L	CCF-3 1/2-S	CRSC-56
CS128LW	CCF-4-SB	CRSBC-64	CS128L	CCF-4-S	CRSC-64
CS160LW	CCF-5-SB	—	CS160L	CCF-5-S	—
CS192LW	CCF-6-SB	—	CS192L	CCF-6-S	—

*Cannot be lubricated through hexhead

UNIVERSAL SERIES™ INTERCHANGE TABLES

STANDARD STUD
With Hex Socket Head Eccentric Bushing — Sealed

RBC UNIVERSAL HexLube® Series	REPLACES Direct Interchange	
RBC Part No.	McGill	Torrington
S16LWX	CFE-1/2-SB	CRSBE-8-1
S18LWX	CFE-9/16-SB	—
S20LWX	CFE-5/8-SB	CRSBE-10-1
S22LWX	CFE-11/16-SB	—
S24LWX	CFE-3/4-SB	CRSBE-12
S28LWX	CFE-7/8-SB	CRSBE-14
S32LWX	CFE-1-SB	CRSBE-16
S36LWX	CFE-1 1/8-SB	CRSBE-18
S40LWX	CFE-1 1/4-SB	CRSBE-20
S44LWX	CFE-1 3/8-SB	CRSBE-22
S48LWX	CFE-1 1/2-SB	CRSBE-24
S52LWX	CFE-1 5/8-SB	CRSBE-26
S56LWX	CFE-1 3/4-SB	CRSBE-28
S60LWX	CFE-1 7/8-SB	CRSBE-30
S64LWX	CFE-2 -SB	CRSBE-32
S72LWX	CFE-2 1/4-SB	CRSBE-36
S80LWX	CFE-2 1/2-SB	CRSBE-40
S88LWX	CFE-2 3/4-SB	CRSBE-44
S96LWX	CFE-3 -SB	CRSBE-48
S104LWX	CFE-3 1/4-SB	CRSBE-52
S112LWX	CFE-3 1/2-SB	CRSBE-56
S128LWX	CFE-4 -SB	CRSBE-64

STANDARD STUD
With Hex Socket Head Crowned Outer Eccentric Bushing —Sealed

RBC UNIVERSAL HexLube® Series	REPLACES Direct Interchange	
RBC Part No.	McGill	Torrington
CS16LWX	CCFE-1/2-SB	CRSBCE-8-1
CS18LWX	CCFE-9/16-SB	—
CS20LWX	CCFE-5/8-SB	CRSBCE-10-1
CS22LWX	CCFE-11/16-SB	—
CS24LWX	CCFE-3/4-SB	CRSBCE-12
CS28LWX	CCFE-7/8-SB	CRSBCE-14
CS32LWX	CCFE-1-SB	CRSBCE-16
CS36LWX	CCFE-1 1/8-SB	CRSBCE-18
CS40LWX	CCFE-1 1/4-SB	CRSBCE-20
CS44LWX	CCFE-1 3/8-SB	CRSBCE-22
CS48LWX	CCFE-1 1/2-SB	CRSBCE-24
CS52LWX	CCFE-1 5/8-SB	CRSBCE-26
CS56LWX	CCFE-1 3/4-SB	CRSBCE-28
CS60LWX	CCFE-1 7/8-SB	CRSBCE-30
CS64LWX	CCFE-2-SB	CRSBCE-32
CS72LWX	CCFE-2 1/4-SB	CRSBCE-36
CS80LWX	CCFE-2 1/2-SB	CRSBCE-40
CS88LWX	CCFE-2 3/4-SB	CRSBCE-44
CS96LWX	CCFE-3-SB	CRSBCE-48
CS104LWX	CCFE-3 1/4-SB	CRSBCE-52
CS112LWX	CCFE-3 1/2-SB	CRSBCE-56
CS128LWX	CCFE-4-SB	CRSBCE-64

UNIVERSAL SERIES™ INTERCHANGE TABLES

HEAVY STUD
With Hex Socket Head — Sealed

RBC UNIVERSAL HexLube® Series	REPLACES Direct Interchange		REPLACES				
RBC Part No.	McGill	Torrington	RBC		McGill		Torrington
H16LW*	CFH-1/2-SB	N/A	H16	H16L	CFH-1/2	CFH-1/2-S	CRH-8-1
H18LW*	CFH-9/16-SB	CRHSB-10-1	H18	H18L	CFH-9/16	CFH-9/16-S	N/A
H20LW*	CFH-5/8-SB	N/A	H20	H20L	CFH-5/8	CFH-5/8-S	CRH-10-1
H22LW*	CFH-11/16-SB	CRHSB-12	H22	H22L	CFH-11/16	CFH-11/16-S	N/A
H24LW	CFH-3/4-SB	CRHSB-14	H24	H24L	CFH-3/4	CFH-3/4S-S	CRH-12
H28LW	CFH-7/8-SB	CRHSB-16	H28	HS28L	CFH-7/8	CFH-7/8S-S	CRH-14
H32LW	CFH-1-SB	CRHSB-18	H32	HS32L	CFH-1	CFH-1S-S	CRH-16
H36LW	CFH-1 1/8-SB	CRHSB-20	H36	HS36L	CFH-1 1/8	CFH-1 1/8-S	CRH-18
H40LW	CFH-1 1/4-SB	CRHSB-22	H40	HS40L	CFH-1 1/4	CFH-1 1/4-S	CRH-20
H44LW	CFH-1 3/8-SB	CRHSB-24	H44	HS44L	CFH-1 3/8	CFH-1 3/8-S	CRH-22
H48LW	CFH-1 1/2-SB	CRHSB-26	H48	HS48L	CFH-1 1/2	CFH-1 1/2-S	CRH-24
H52LW	CFH-1 5/8-SB	CRHSB-28	H52	HS52L	CFH-1 5/8	CFH-1 5/8-S	CRH-26
H56LW	CFH-1 3/4-SB	CRHSB-30	H56	HS56L	CFH-1 3/4	CFH-1 3/4-S	CRH-28
H60LW	CFH-1 7/8-SB	CRHSB-32	H60	HS60L	CFH-1 7/8	CFH-1 7/8-S	CRH-30
H64LW	CFH-2 -SB	CRHSB-36	H64	HS64L	CFH-2	CFH-2-S	CRH-32
H72LW	CFH-2 1/4-SB	CRHSB-40	H72	HS72L	CFH-2 1/4	CFH-2 1/4-S	CRH-36
H80LW	CFH-2 1/2-SB	CRHSB-44	H80	H80L	CFH-2 1/2	CFH-2 1/2-S	CRH-40
H88LW	CFH-2 3/4-SB	CRHSB-48	H88	H88L	CFH-2 3/4	CFH-2 3/4-S	CRH-44
H96LW	CFH-3 -SB	CRHSB-52	H96	H96L	CFH-3	CFH-3-S	CRH-48
H104LW	CFH-3 1/4-SB	CRHSB-56	H104	H104L	CFH-3 1/4	CFH-3 1/4-S	CRH-52
H112LW	CFH-3 1/2-SB	CRHSB-64	H112	H112L	CFH-3 1/2	CFH-3 1/2-S	CRH-56
H128LW	CFH-4 -SB	N/A	H128	H128	CFH-4	CFH-4S	CRH-64
H160LW	CFH-5 -SB	N/A	N/A	N/A	N/A	N/A	N/A
H192LW	CFH-6 -SB	N/A	N/A	N/A	N/A	N/A	N/A
H224LW	CFH-7 -SB		N/A	N/A	N/A	N/A	N/A

HEAVY STUD
With Crowned Outer — Sealed—Hex Head

RBC UNIVERSAL HexLube® Series	REPLACES Direct Interchange		REPLACES		
RBC Part No.	McGill	Torrington	RBC	McGill	Torrington
CH16LW	CCFH-1/2-SB	N/A	CH16L	CCFH-1/2-S	N/A
CH18LW	CCFH-9/16-SB	N/A	CH18L	CCFH-9/16-S	N/A
CH20LW	CCFH-5/8-SB	N/A	CH20L	CCFH-5/8-S	CRHSC-10-1
CH22LW	CCFH-11/16-SB	N/A	CH22L	CCFH-11/16-S	N/A
CH24LW	CCFH-3/4-SB	N/A	CH24L	CCFH-3/4-S	CRHSC-12
CH28LW	CCFH-7/8-SB	N/A	CH28L	CCFH-7/8-S	N/A
CH32LW	CCFH-1-SB	N/A	CH32L	CCFH-1-S	CRHSC-16
CH36LW	CCFH-1 1/8-SB	N/A	CH36L	CCFH-1 1/8-S	CRHSC-18
CH40LW	CCFH-1 1/4-SB	N/A	CH40L	CCFH-1 1/4-S	CRHSC-20
CH44LW	CCFH-1 3/8-SB	N/A	CH44L	CCFH-1 3/8-S	N/A
CH48LW	CCFH-1 1/2-SB	N/A	CH48L	CCFH-1 1/2-S	N/A
CH52LW	CCFH-1 5/8-SB	N/A	CH52L	CCFH-1 5/8-S	N/A
CH56LW	CCFH-1 3/4-SB	N/A	CH56L	CCFH-1 3/4-S	CRHSC-28
CH60LW	CCFH-1 7/8-SB	N/A	CH60L	CCFH-1 7/8-S	N/A
CH64LW	CCFH-2-SB	N/A	CH64L	CCFH-2-S	CRHSC-32
CH72LW	CCFH-2 1/4-SB	N/A	CH72L	CCFH-2 1/4-S	N/A
CH80LW	CCFH-2 1/2-SB	N/A	CH80L	CCFH-2 1/2-S	CRHSC-40
CH88LW	CCFH-2 3/4-SB	N/A	CH88L	CCFH-2 3/4-S	N/A
CH96LW	CCFH-3-SB	N/A	CH96L	CCFH-3S	CRHSC-48
CH104LW	CCFH-3 1/4-SB	N/A	CH104L	CCFH3 1/4-S	N/A
CH112LW	CCFH-3 1/2-SB	N/A	CH112L	CCFH-3 1/2-S	N/A
CH128LW	CCFH-4-SB	N/A	CH128L	CCFH-4-S	N/A
CH160LW	CCFH-5-SB	N/A	CH160L	CCFH-5-S	N/A
CH192LW	CCFH-6-SB	N/A	CH192L	CCFH-6-S	N/A

*Cannot be lubricated through hexhead

UNIVERSAL SERIES™ INTERCHANGE TABLES

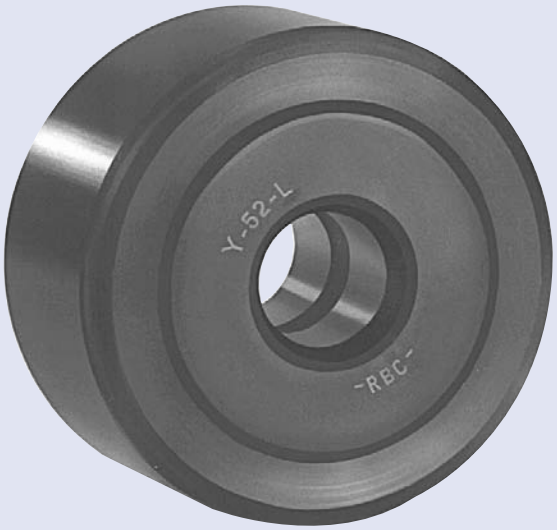

YOKE ROLLER
Sealed

RBC UNIVERSAL Series	REPLACES Direct Interchange		REPLACES		
RBC Part No.	McGill	Torrington	RBC	McGill	Torrington
Y24L	CYR-3/4-S	YCRS-12	Y24	CYR3/4	YCR12
Y28L	CYR-7/8-S	YCRS-14	Y28	CYR7/8	YCR14
Y32L	CYR-1-S	YCRS-16	Y32	CYR1	YCR16
Y36L	CYR-1 1/8-S	YCRS-18	Y36	CYR1 1/8	YCR18
Y40L	CYR-1 1/4-S	YCRS-20	Y40	CYR1 1/4	YCR20
Y44L	CYR-1 3/8-S	YCRS-22	Y44	CYR1 3/8	YCR22
Y48L	CYR-1 1/2-S	YCRS-24	Y48	CYR1 1/2	YCR24
Y52L	CYR-1 5/8-S	YCRS-26	Y52	CYR1 5/8	YCR26
Y56L	CYR-1 3/4-S	YCRS-28	Y56	CYR1 3/4	YCR28
Y60L	CYR-1 7/8-S	YCRS-30	Y60	CYR1 7/8	YCR30
Y64L	CYR-2-S	YCRS-32	Y64	CYR2	YCR32
Y72L	CYR-2 1/4-S	YCRS-36	Y72	CYR2 1/4	YCR36
Y80L	CYR-2 1/2-S	YCRS-40	Y80	CYR2 1/2	YCR40
Y88L	CYR-2 3/4-S	YCRS-44	Y88	CYR2 3/4	YCR44
Y96L	CYR-3-S	YCRS-48	Y96	CYR3	YCR48
Y104L	CYR-3 1/4-S	YCRS-52	Y104	CYR3 1/4	YCR52
Y112L	CYR-3 1/2-S	YCRS-56	Y112	CYR3 1/2	YCR56
Y128L	CYR-4-S	YCRS-64	Y128	CYR4	YCR64
Y160L	CYR-5-S	YCRS-80	N/A	N/A	N/A
Y192L	CYR-6-S	YCRS-96	N/A	N/A	N/A
Y224L	CYR-7-S	YCRS-112	N/A	N/A	N/A

UNIVERSAL SERIES™ INTERCHANGE TABLES

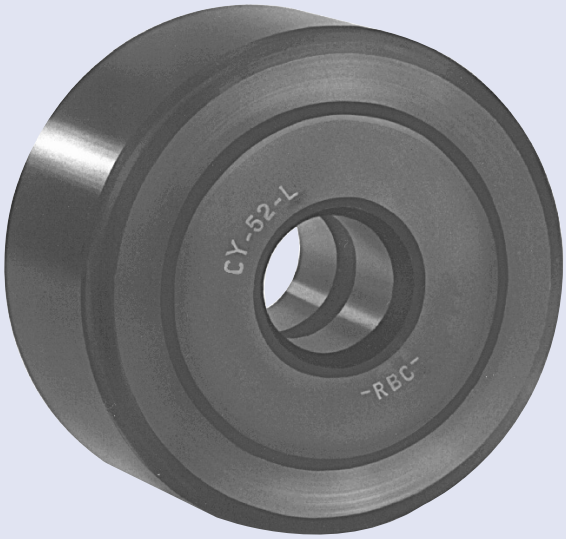

YOKE ROLLER
Crowned Outer —Sealed

RBC UNIVERSAL Series	REPLACES Direct Interchange	
RBC Part No.	McGill	Torrington
CY24L	CCYR-3/4-S	YCRSC-12
CY28L	CCYR-7/8-S	YCRSC-14
CY32L	CCYR-1-S	YCRSC-16
CY36L	CCYR-1 1/8-S	YCRSC-18
CY40L	CCYR-1 1/4-S	YCRSC-20
CY44L	CCYR-1 3/8-S	YCRSC-22
CY48L	CCYR-1 1/2-S	YCRSC-24
CY52L	CCYR-1 5/8-S	YCRSC-26
CY56L	CCYR-1 3/4-S	YCRSC-28
CY60L	CCYR-1 7/8-S	YCRSC-30
CY64L	CCYR-2 -S	YCRSC-32
CY72L	CCYR-2 1/4-S	YCRSC-36
CY80L	CCYR-2 1/2-S	YCRSC-40
CY88L	CCYR-2 3/4-S	YCRSC-44
CY96L	CCYR-3-S	YCRSC-48
CY104L	CCYR-3 1/4-S	YCRSC-52
CY112L	CCYR-3 1/2-S	YCRSC-56
CY128L	CCYR-4-S	YCRSC-64
CY160L	CCYR-5-S	YCRSC-80
CY192L	CCYR-6-S	YCRSC-96
CY224L	CCYR-7-S	YCRSC-112

CUSTOM DESIGNED CAM FOLLOWERS

In addition to our complete line of standard cam followers, RBC also will manufacture many other cam followers of a highly specialized nature for specific applications. As each special cam follower is engineered for a particular set of operating conditions, it is essential that we have complete data regarding the application, including potential production volumes.

Shown below are just a few of our custom designed cam followers.

Stainless Steel Cam Follower

Double Outer Ring Cam Follower

Scotch Yoke Bearing
For Stamping Press

Double Row Caged Roller Follower

Plain Shank with Snap-Ring Groove

Innovation. Commitment. Quality.

RBC Bearings has been producing bearings in the USA since 1919. In addition to unique custom bearings, RBC offers a full line of standard industrial and aerospace bearings, including:

Spherical Plain Bearings

Radial, angular contact, extended inner ring, high misalignment. QuadLube®, ImpactTuff®, SpreadLock® Seal, CrossLube®, DuraLube™, and self-lubricating bearings. Available in inch and metric sizes.

Thin Section Ball Bearings

Standard cross sections to one inch. Sizes to 40 inches. Stainless steel and other materials are available. Seals are available on all sizes and standard cross sections. Super duplex configurations.

Tapered Roller Bearings

Tyson® case-hardened and through-hardened tapered roller bearings. Available in many sizes. Used in Class 8 heavy truck and trailer wheel bearings, gear boxes, and final drive transmissions.

Tapered Roller Thrust Bearings

Case-hardened. Sealed and unsealed for truck, tractor, and construction equipment steer axles, and Class 8 trailer landing gear.

Integrated Assemblies

For robots and other process tool applications. Engineering design assistance. Production volume capacity.

Cam Followers

Standard stud, heavy stud, yoke type, caged roller followers. Patented RBC Roller® cylindrical roller cam followers, HexLube® universal cam followers, airframe track rollers.

Needle Roller Bearings

Pitchlign® caged heavy duty needle roller bearings, inner rings, TJ TandemRoller® bearings for long life.

Self-Lubricating Bearings

Radial, thrust, rod ends, spherical bearings, high temperature, high loads. Available in inch and metric sizes. Fiberglide® self-lubricating bearings.

Airframe Control Bearings

Ball bearing types, self-lubricating types, needle roller track rollers.

Dowel Pins, Loose Needle Rollers, Shafts

Precision Products dowel pins, loose needle rollers, and shafts.

Commercial Rod Ends

Commercial and industrial, precision, Mil-Spec series, self-lubricating, and aircraft. Sold under the Heim®, Unibal®, and Spherco® brands. Available in inch and metric sizes.

Ball Bearings

Precision ground, semi-ground, unground. High loads, long life, smooth operation. Nice® ball bearings are offered in caged and full complement configurations.

Specials

RBC manufactures many specialty bearings for the aerospace, oil and energy, semiconductor equipment, packaging, transportation, and other industries.

www.rbcbearings.com
800.390.3300

This document contains a general overview of the products and features described herein. It is solely for informational purposes, does not represent a warranty of the information contained herein, and is not to be construed as an offer to sell or a solicitation to buy. Contact RBC Bearings Incorporated for detailed information suitable to your specific applications. RBC Bearings Incorporated reserves the right to modify its products and related product information at any time without prior notice.

Some of the products listed herein may be covered by one or more issued and pending U.S. or foreign patents. Contact RBC Bearings for product specific information.

RBC 6/08